inventor

AIR CONDITIONING SYSTEMS
CASSETTE TYPE

• INSTALLATION MANUAL
• ΕΓΧΕΙΡΙΔΙΟ ΕΓΚΑΤΑΣΤΑΣΗΣ
• MANUAL DE INSTALARE

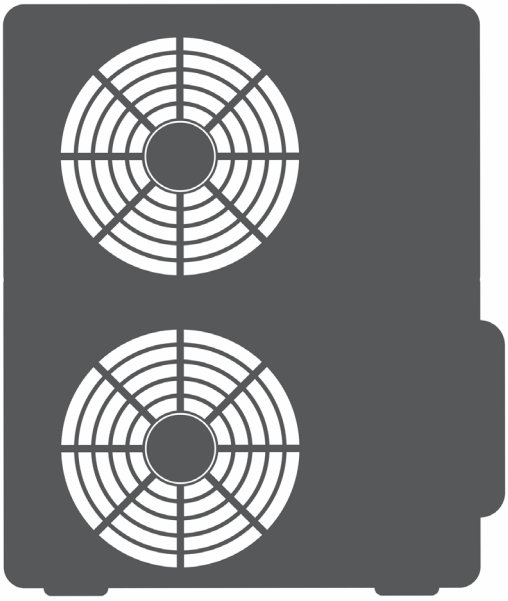

MODELS:
V4MCI-24/U4MRS-24 | V4MCI-36/U4MRS-36
V4MCI-42/U4MRT-42 | V4MCI-50/U4MRT-50
V4MCI-60/U4MRT-60

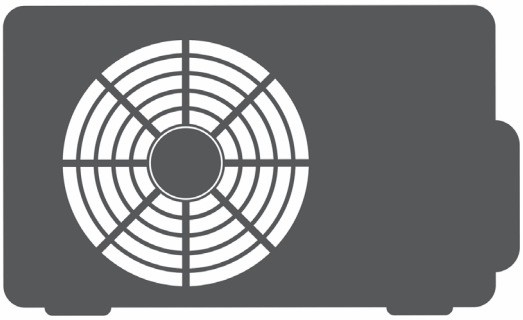

ENGLISH | ΕΛΛΗΝΙΚΑ | ROMANA

- If used as MULTI unit, please refer to the Installation & operation manuals packed with outdoor unit.

CONTENTS

Page

PRECAUTIONS.....1
INSTALLATION INFORMATION.....2
ACCESSORIES.....3
INDOOR UNIT INSTALLATION.....4
OUTDOOR UNIT INSTALLATION.....9
INSTALL THE REFRIGERANT PIPE.....11
CONNECT THE DRAIN PIPE.....13
ELECTRIC WIRING WORK.....14
TWINS FUNCTION.....16
TEST OPERATION.....16

PRECAUTIONS

- Keep this manual where the operator can easily find them.
- Read this manual attentively before starting up the units.
- For safety reason the operator must read the following cautions carefully.

The safty precautions listed here are divided into two categories.

WARNING

If you do not follow these instrutions exactly, the unit may cause property damage, personal injury or loss of life.

CAUTION

If you do not follow these instrutions exactly, the unit may cause minor or moderate property damage, personal injury.

After completing the installation, make sure that the unit operates properly during the start-up operation. Please instruct the customer on how to operate the unit and keep it maintained.Also, inform customers that they should store this installation manual along with the owner's manual for future reference.

WARNING

Be sure only trained and qualified service personnel to install, repair or service the equipment.

Improper installation, repair, and maintenance may result in electric shocks, short-circuit, leaks, fire or other damage to the equipment.

Install according to this installation instructions strictly.
If installation is defective, it will cause water leakage, electrical shock and fire.

When installing the unit in a small room, take measures against to keep refrigerant concentration from exceeding allowable safety limits in the event of refrigerant leakage. Contact the place of purchase for more information. Excessive refrigerant in a closed ambient can lead to oxygen deficiency.

Use the attached accessories parts and specified parts for installation.
otherwise, it will cause the set to fall, water leakage, electrical shock and fire.

Install at a strong and firm location which is able to withstand the set' s weight.
If the strength is not enough or installation is not properly done, the set will drop to cause injury.

The appliance must be installed 2.5m above floor.

The appliance shall not be installed in the laundry.

Before obtaining access to terminals, all supply circuits must be disconnected.

The appliance must be positioned so that the plug is accessible.

The enclosure of the appliance shall be marked by word, or by symbols, with the direction of the fluid flow.

For electrical work, follow the local national wiring standard, regulation and this installation instructions. An independent circuit and single outlet must be used.
If electrical circuit capacity is not enough or defect in electrical work, it will cause electrical shock or fire.

Use the specified cable and connect tightly and clamp the cable so that no external force will be acted on the terminal.
If connection or fixing is not perfect, it will cause heat-up or fire at the connection.

Wiring routing must be properly arranged so that control board cover is fixed properly.
If control board cover is not fixed perfectly, it will cause heat-up at connection point of terminal, fire or electrical shock.

If the supply cord is damaged, it must be replaced by the manufacture or its service agent or a similarly qualified person in order to avoid a hazard.

An all-pole disconnection switch having a contact separation of at least 3mm in all poles should be connected in fixed wiring.

When carrying out piping connection, take care not to let air substances go into refrigeration cycle.
Otherwise, it will cause lower capacity, abnormal high pressure in the refrigeration cycle, explosion and injury.

Do not modify the length of the power supply cord or use of extension cord, and do not share the single outlet with other electrical appliances.
Otherwise, it will cause fire or electrical shock.

Carry out the specified installation work after taking into account strong winds, typhoons or earthquakes.
Improper installation work may result in the equipment falling and causing accidents.

If the refrigerant leaks during installation, ventilate the area immediately.
Toxic gas may be produced if the refrigerant comes into the place contacting with fire.

The temperature of refrigerant circuit will be high, please keep the interconnection cable away from the copper tube.

After completing the installation work, check that the refrigerant does not leak.
Toxic gas may be produced if the refrigerant leaks into the room and comes into contact with a source of fire, such as a fan heater, stove or cooker.

CAUTION

Ground the air conditioner.
Do not connect the ground wire to gas or water pipes, lightning rod or a telephone ground wire.Inappropriate grounding may result in electric shocks.

Be sure to install an earth leakage breaker.
Failure to install an earth leakage breaker may result in electric shocks.

Connect the outdoor unit wires , then connect the indoor unit wires.
You are not allowed to connect the air conditioner with the power supply until the wiring and piping is done.

While following the instructions in this installation manual, install drain piping in order to ensure proper drainage and insulate piping in order to prevent condensation.
Improper drain piping may result in water leakage and property damage.

Install the indoor and outdoor units, power supply wiring and connecting wires should be at least 1 meter away from televisions or radios in order to prevent image interference or noise.
Depending on the radio waves, a distance of 1 meter may not be sufficient enough to eliminate the noise.

The appliance is not intended for use by young children or infirm persons without supervision.

Don't install the air conditioner in the following circumstance:

- There is petrolatum existing.
- There is salty air surrounding (near the coast).
- There is caustic gas (the sulfide, for example) existing in the air (near a hot spring).
- The Volt vibrates violently (in the factories).
- In buses or cabinets.
- In kitchen where it is full of oil gas.
- There is strong electromagnetic wave existing.
- There are inflammable materials or gas.
- There is acid or alkaline liquid evaporating.
- Other special conditions.

The appliance shall be installed in accordance with national wiring regulations.

Do not operate your air conditioner in a wet room such as a bathroom or laundry room.

An all-pole disconnection device which has at least 3mm clearances in all poles , and have a leakage current that may exceed 10mA, the residual current device (RCD) having a rated residual operating current not exceeding 30mA, and disconnection must be incorporated in the fixed wiring in accordance with the wiring rules.

INSTALLATION INFORMATION

- To install properly, please read this "installation manual" at first.
- The air conditioner must be installed by qualified persons.
- When installing the indoor unit or its tubing, please follow this manual as strictly as possible.
- If the air conditioner is installed on a metal part of the building, it must be electrically insulated according to the relevant standards to electrical appliances.
- When all the installation work is finished, please turn on the power only after a thorough check.
- Regret for no further announcement if there is any change of this manual caused by product improvement.

INSTALLATION ORDER

- Indoor unit installation;
- Outdoor unit installation;
- Install the refrigerant pipe;
- Connect the drain pipe ;
- Electric wiring work;
- Twins function
- Test operation.

ATTACHED FITTINGS

Please check whether the following fittings are of full scope. If there are some spare fittings , please restore them carefully.

	NAME	SHAPE	QUANTITY
Tubing & Fittings	1. Installation paper board		1 (on some models)
	2. Soundproof / insulation sheath		1 (on some models)
	3.Out-let pipe sheath		1 (on some models)
	4.Out-let pipe clasp		1 (on some models)
Drainpipe Fittings (for cooling & heating)	5. Drain joint		1 (on some models)
	6. Seal ring		1 (on some models)
Remote controller & Its Frame (Match with remote controller)	7. Remote controller		1 (on some models)
	8. Remote controller holder		1 (on some models)
	9. Mounting screw(ST2.9x10-C-H)		2 (on some models)
	10.Alkaline dry batteries (Am4)		2 (on some models)
	11. Remote controller manual		1 (on some models)
Wire controller & Its Frame (Match with wire controller)	12. Wire controller		1 (on some models)
	13. Wire controller owner's manual		1 (on some models)
	14. Wire controller installation manual		1 (on some models)
Installation accessory (The product you have might not be provided the following accessory)	15. Expansible hook		4
	16. Installation hook		4
EMC & Its Fitting (for some models)	17. Magnetic ring (twist the electirc wires L and N around the magnetic ring to five circles)	L N	1
Others	18. Owner's manual		1
	19. Installation manual		1

1. INDOOR UNIT INSTALLATION

1.1 Installation place

The indoor unit should be installed in a location that meets the following requirements:

- There is enough room for installation and maintenance.
- The ceiling is horizontal, and its structure can endure the weight of the indoor unit.
- The outlet and the inlet are not impeded, and the influence of external air is the least.
- The air flow can reach throughout the room.
- The connecting pipe and drainpipe could be extracted out easily.
- There is no direct radiation from heaters.

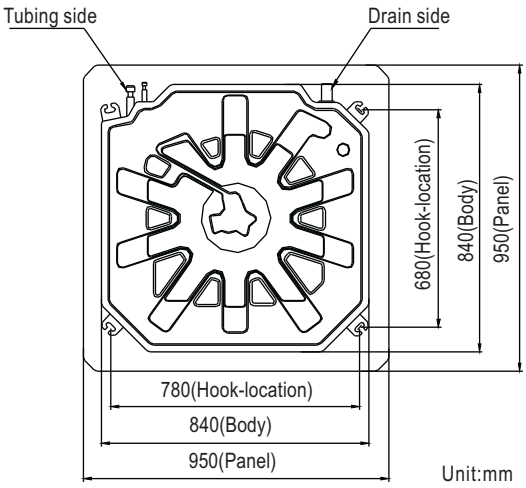

Fig.1-1

CAUTION

Keep indoor unit, outdoor unit, power supply wiring and transmission wiring at least 1 meter away from televisions and radios. This is to prevent image interference and noise in those electrical appliances. (Noise may be generated depending on the conditions under which the electric wave is generated, even if 1 meter is kept.)

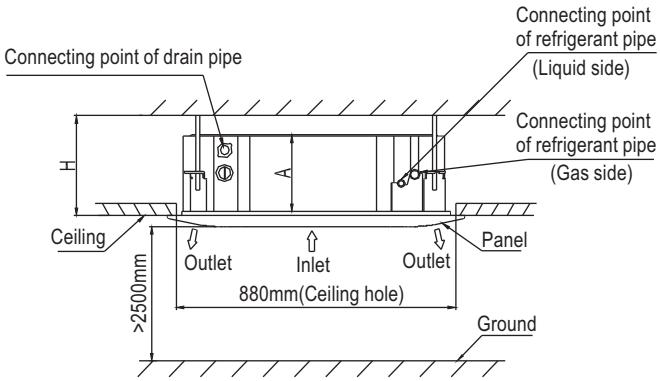

Fig.1-2

NOTE

All the pictures in this manual are for explanation purpose only. There may be slightly different from the air conditioner you purchased (depend on model). The actual shape shall prevail.

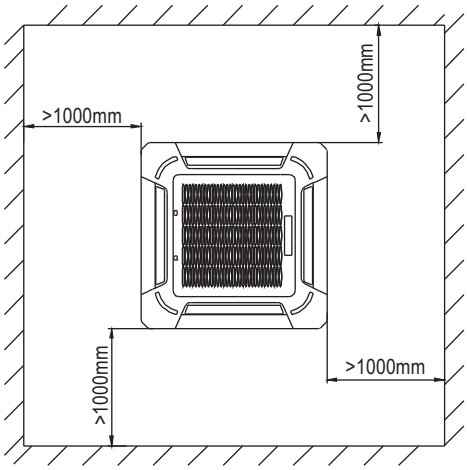

Fig.1-3

Unit:mm

MODEL(Btu/h)	A	H
18K	205	235
24K/30K/36K/42K	245	275
48K/55K	287	317

1.2 Install the main body

■ The existing ceiling (to be horizontal)

1 Cut a quadrangular hole of 880x880mm in the ceiling according to the shape of the installation paper board.(Refer to Fig.1-2)
- The center of the hole should be at the same position of that of the air conditioner body.
- Determine the lengths and outlets of the connecting pipe, drainpipe and cables.
- To balance the ceiling and to avoid vibration, please enforce the ceiling when necessary.

2 Select the position of installation hooks according to the hook holes on the installation board.
- Drill four holes of Ø12mm, 45~50mm deep at the selected positions on the ceiling. Then embed the expansible hooks (fittings).
- Face the concave side of the installation hooks toward the expansible hooks. Determine the length of the installation hooks from the height of ceiling, then cut off the unnecessary part.
- If the ceiling is extremely high, please determine the length of the installation hook according to facts.

3 Adjust the hexangular nuts on the four installation hooks evenly, to ensure the balance of the body.
- If the drainpipe is awry, leakage will be caused by the malfunction of the water-level switch.
- Adjust the position to ensure the gaps between the body and the four sides of ceiling are even. The body's lower part should sink into the ceiling for 10~12 mm.(Refer to Fig.1-4)
- In general, L is half of the screw length of the installation hook. (Refer to Fig.1-4)
- Locate the air conditioner firmly by wrenching the nuts after having adjusted the body's position well.(Refer to Fig.1-5)

■ New built houses and ceilings

1 In the case of new built house, the hook can be embedded in advance (refer to 2 mentioned above). But it should be strong enough to bear the indoor unit and will not become loose because of concrete shrinking.

2 After installing the body, please fasten the installation paper board onto the air conditioner with bolts(M6X12) to determine in advance the sizes and positions of the hole opening on ceiling.(Refer to Fig.1-6)
- Please first guarantee the flatness and horizontal of ceiling when installing it.
- Refer to 1 mentioned above for others.

3 Refer to 3 above for installation.

4 Remove the installation paper board.

CAUTION

After installing the body, the four bolts(M6x12)must be fastened to the air conditioner onto ensure the body is grounded well.

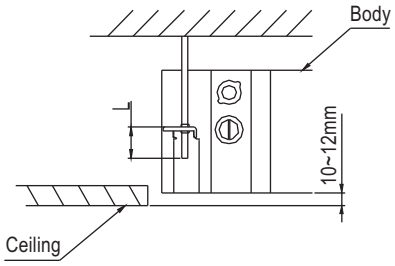

Fig.1-4

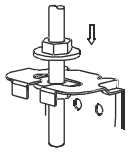
Fig.1-5

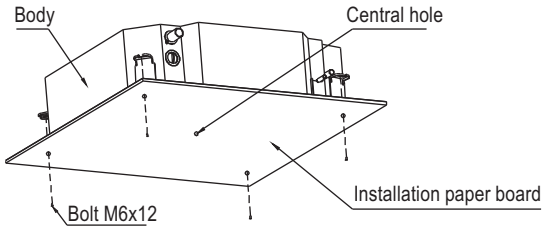

Fig.1-6

1.3 Install The Panel

CAUTION

Never put the panel face down on floor or against the wall, or on bulgy objects.
Never crash or strike it.

1 Remove the air-in grill.

■ Slide two grill switches toward the middle at the same time, and then pull them up.(Refer to Fig.1-7)

■ Draw the grill up to an angle of about 45, and remove it. (Refer to Fig.1-8)

2 Remove the installation covers at the four corners

■ Wrench off the bolts, loose the rope of the installation covers, and remove them. (Refer to Fig.1-9)

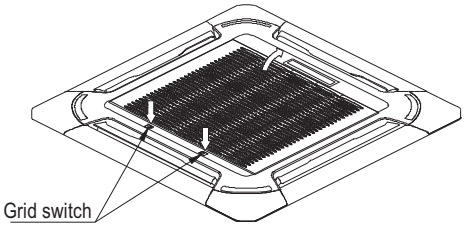

Fig.1-7

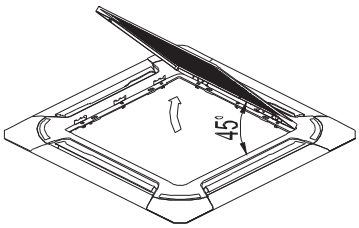

Fig.1-8

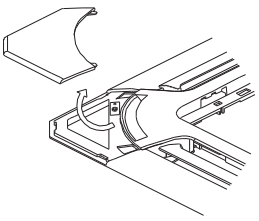
Fig.1-9

3 Install the panel

- Align the swing motor on the panel to the tubing joints of the body properly. (Refer to Fig.1-10)
- Fix hooks of the panel at swing motor and its opposite sides to the hooks of corresponding water receiver.(Refer to Fig.1-10.1) Then hang the other two panel hooks onto corresponding hangers of the body. (Refer to Fig.5-10.2)

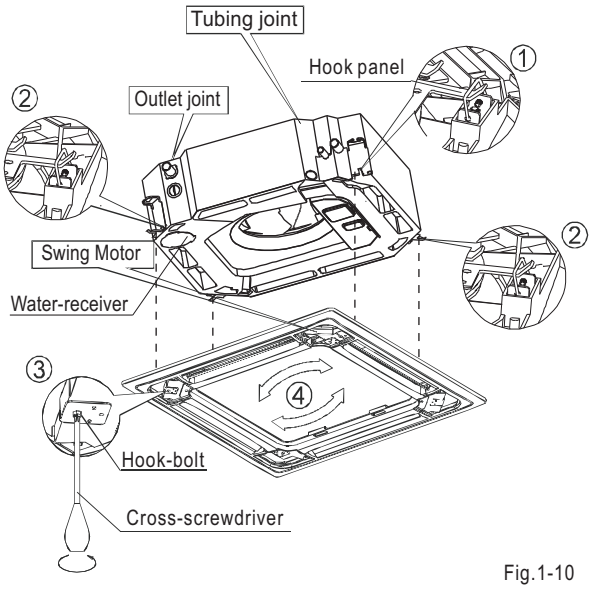

Fig.1-10

CAUTION

Do not coil the wiring of the swing motor into the seal sponge.

- Adjust the four panel hook screws to keep the panel horizontal, and screw them up to the ceiling evenly.(Refer to Fig.1-10.3)
- Regulate the panel in the direction of the arrow in Fig.1-10.4 slightly to fit the panel's center to the center of the ceiling's opening. Guarantee that hooks of four corners are fixed well.
- Keep fastening the screws under the panel hooks, until the thickness of the sponge between the body and the panel's outlet has been reduced to about 4~6mm. The edge of the panel should contact with the ceiling well.(Refer to Fig.1-11)
- Malfunction described in Fig.1-12 can be caused by inappropriate tightness the screw.
- If the gap between the panel and ceiling still exists after fastening the screws, the height of the indoor unit should be modified again.(Refer to Fig.1-13-left)
- You can modify the height of the indoor unit through the openings on the panel's four corners, if the lift of the indoor unit and the drainpipe is not influenced (Refer to Fig.1-13-right).

4 Hang the air-in grill to the panel, then connect the lead terminator of the swing motor and that of the control box with corresponding terminators on the body respectively.

5 Relocate the air-in grill in the procedure of reversed order.

6 Relocate the installation cover.

- Fasten the rope of installation cover on the bolt of the installation cover.(Refer to Fig.1-14-left)
- Press the installation cover into the panel slightly. (Refer to Fig.1-14-right)

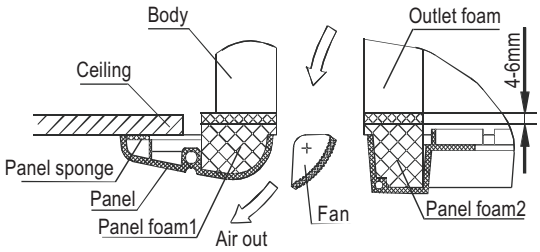

Fig.1-11

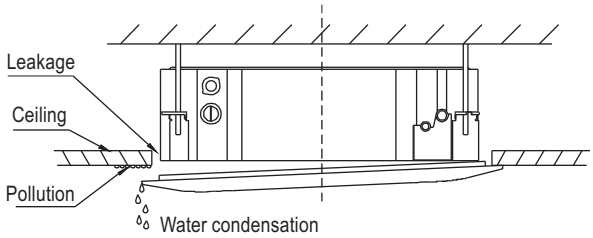

Fig.1-12

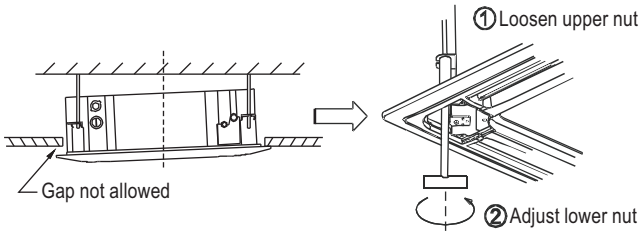

Fig.1-13

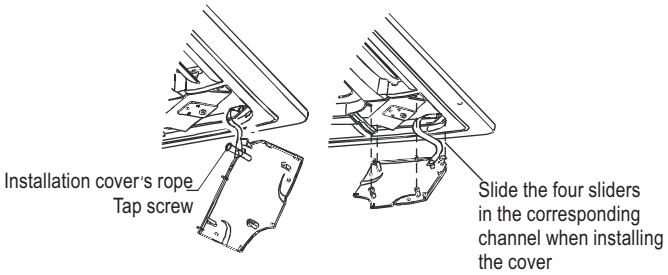

Fig.1-14

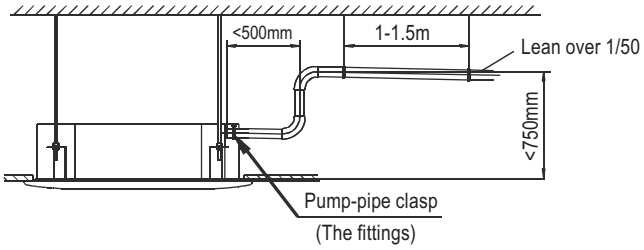

Fig.1-15

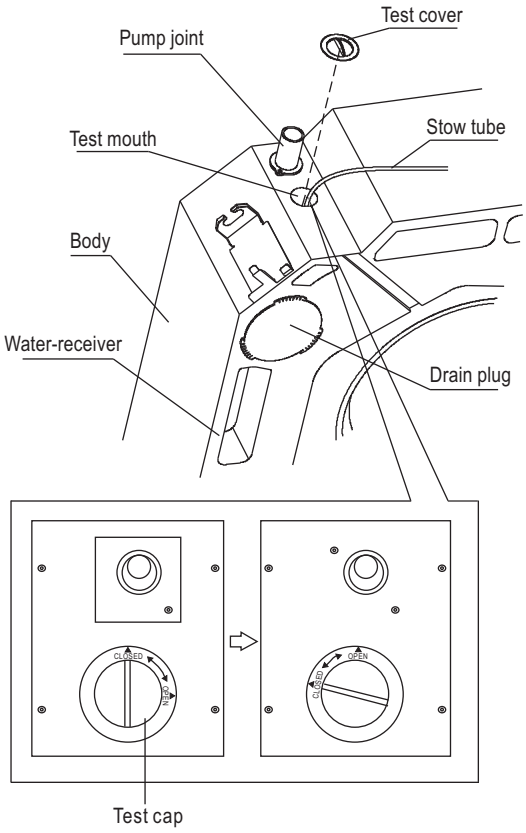

Fig.1-16

■ Drainage test

- Check whether the drainpipe is unhindered.
- New built house should have this test done before paving the ceiling.

■ The unit with pump.

1 Remove the test cover, and stow about 2000ml water to the water pan.

2 Operate the air conditioner in "COOLING" mode. The sound of the drain pump shall be heard. Check whether the water is discharged well (1 min lag is possible, according to the length of the drain pipe), and check whether the water leaks from the joints.

3 Power off the air conditioner and recover the cap.

1.4 Install the distribution duct

Conditioned air can be distributes by means of a distribution duct.

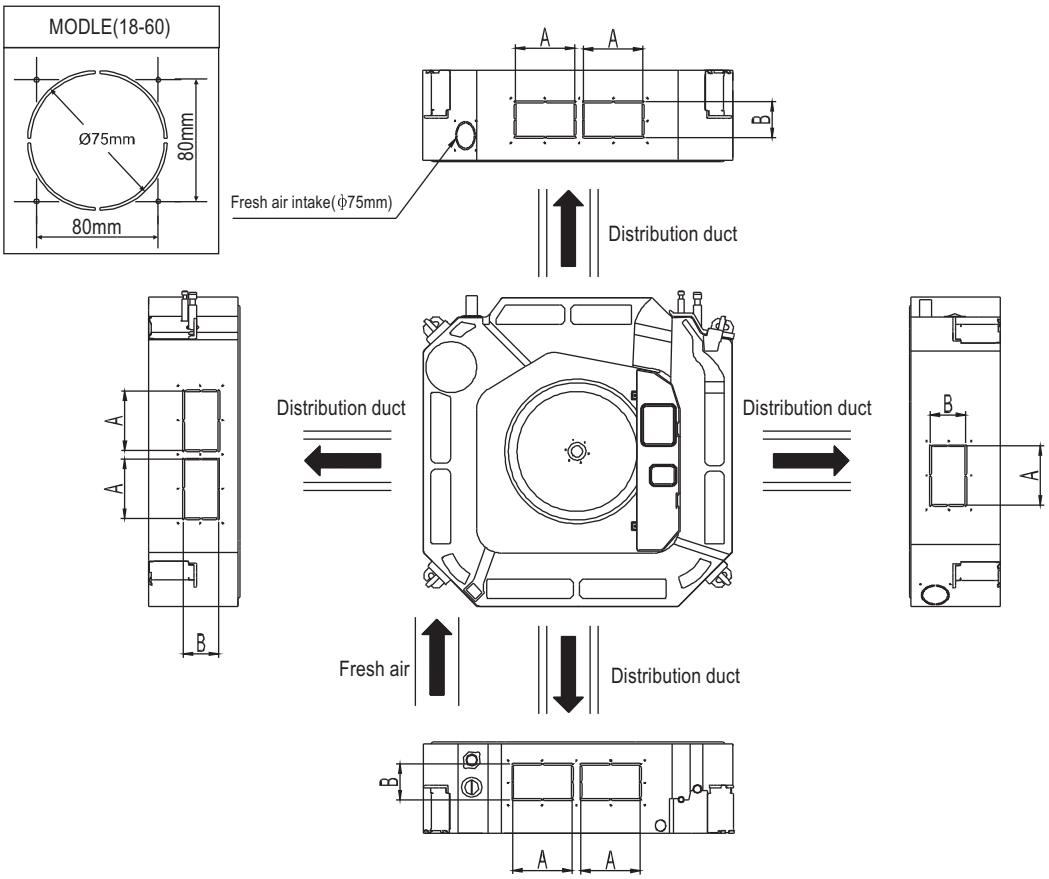

Fig.1-17

NOTE

model 18 to 30	Series A=160mm; Series B=75mm
model 36 to 60	Series A=160mm; Series B=95mm

In case of one duct connection

The air volume in duct is around 300-360m3/h for model 18 to 30 unit.

The air volume in duct is around 400-640m3/h for model 36 to 60 unit.

The max. length of duct is 2m.

The original air outlet with the same direction of duct should be sealed In case of two duct connection.

In case of two duct connection

The air volume in one duct is around 200-260m3/h for model 18 to 30 unit.

The air volume in one duct is around 300-500m3/h for model 36 to 60 unit.

The max. length of duct is 1.5m for one duct.

The original air outlet with the same direction of duct should be sealed.

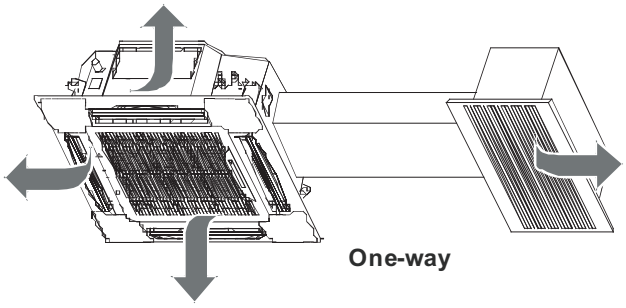

Fig.1-18

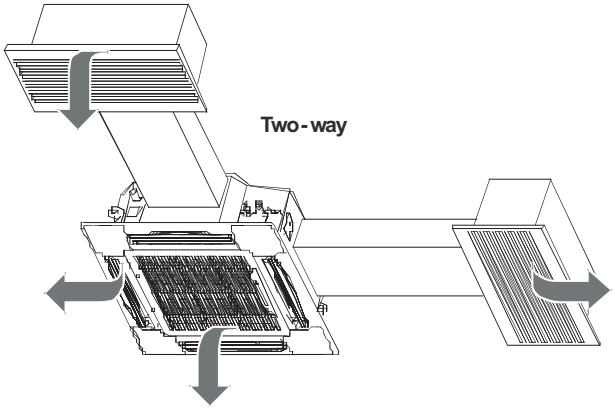

Fig.1-19

2. OUTDOOR UNIT INSTALLATION

2.1 Precautions for selecting the location

1) Choose a place solid enough to bear the weight and vibration of the unit, where the operation noise will not be amplified.
2) Choose a location where the hot air discharged from the unit or the operation noise will not cause a nuisance to the neighbours of the user.
3) Avoid places near a bedroom and the like, so that the operation noise will cause no trouble.
4) There must be sufficient spaces for carrying the unit into and out of the site.
5) There must be sufficient space for air passage and no obstructions around the air inlet and the air outlet.
6) The site must be free from the possibility of flammable gas leakage in a nearby place.
7) Install units, power cords and inter-unit wire at least 3m away from television and radio sets. This is to prevent interference to images and sounds. (Noises may be heard even if they are more than 3m away depending on radio wave conditions.)
8) In coastal areas or other places with salty atmosphere of sulfate gas, corrosion may shorten the life of the air conditioner.
9) Since drain flows out of the outdoor unit, do not place under the unit anything which must be kept away from moisture.

NOTE: Cannot be installed hanging from ceiling or stacked.

CAUTION

When operating the air conditioner in a low outdoor ambient temperature, be sure to follow the instructions described below.

- To prevent exposure to wind, install the outdoor unit with its suction side facing the wall.
- Never install the outdoor unit at a site where the suction side may be exposed directly to wind.
- To prevent exposure to wind, it is recommended to install a baffle plate on the air discharge side of the outdoor unit.
- In heavy snowfall areas, select an installation site where the snow will not affect the unit.

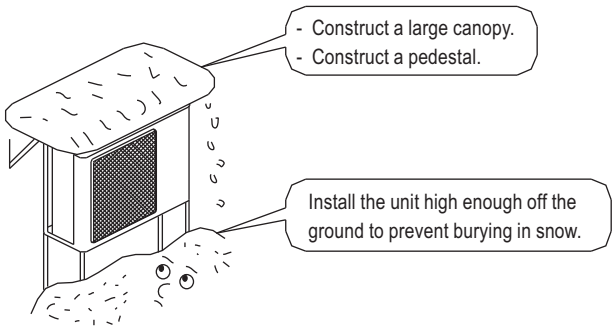

2.2 Figure of body size

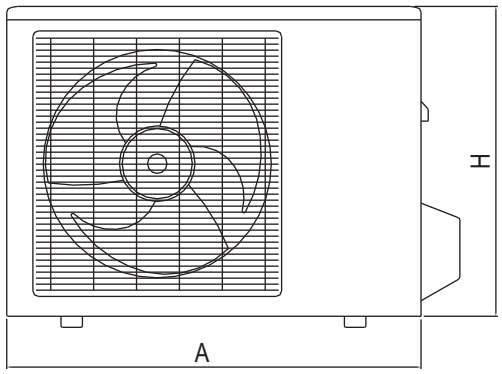

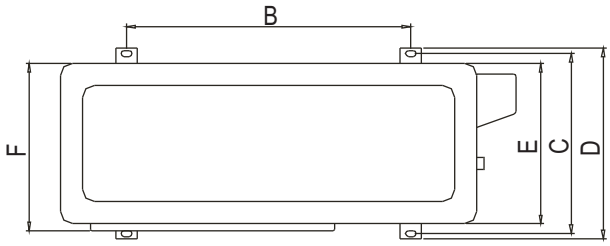

Unit:mm

MODEL(Btu/h)	A	B	C	D	E	F	H
12K/18K	810	549	325	350	305	310	558
24K	845	560	335	360	312	320	700
30K/36K/42K	945	640	405	448	385	395	810
48K/55K	938	634	404	448	368	392	1369

2.3 Installation guidelines

- Where a wall or other obstacle is in the path of outdoor unit's inlet or outlet airflow, follow the installation guidelines below.
- For any of the below installation patterns, the wall height on the outlet side should be 1200mm or less.

Wall facing one side

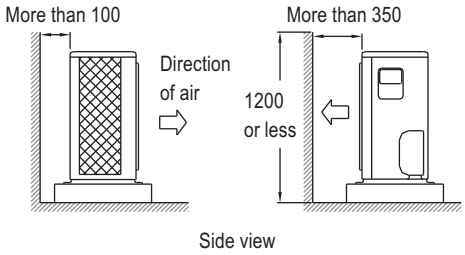

Walls facing two sides

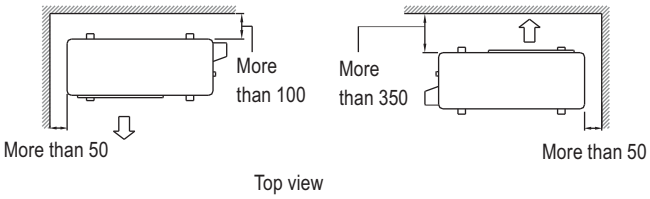

Walls facing three sides

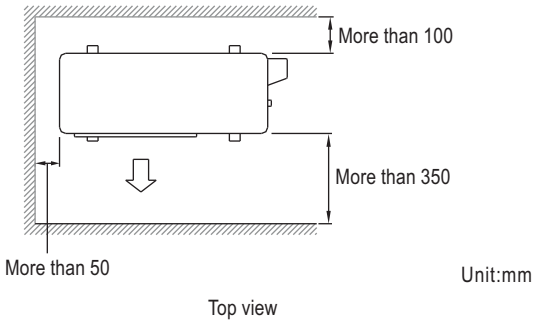

2.4 Outdoor unit installation

1) Installing outdoor unit

- When installing the outdoor unit, refer to "Precautions for selecting the location" .
- Check the strength and level of the installation ground so that the unit will not cause any operating vibration or noise after installed.
- Fix the unit securely by means of the foundation bolts. (Prepare 4 sets of M8 or M10 foundation bolts, nuts and washers each which are available on the market.)

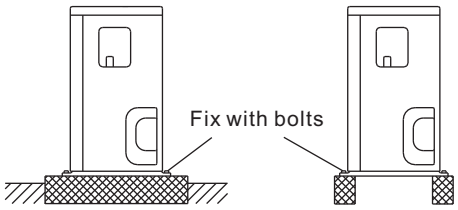

2) Drain work

- If drain work is necessary, follow the procedures below.
- Use drain plug for drainage.
- If the drain port is covered by a mounting base or floor surface, place additional foot bases of at least 30mm in height under the outdoor unit's feet.
- In cold areas, do not use a drain hose with the outdoor unit. (Otherwise, drain water may freeze, impairing heating performance.)

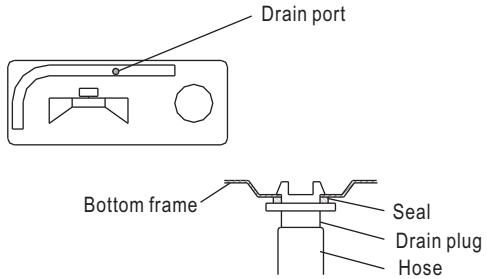

3 INSTALL THE REFRIGERANT PIPE

All field piping must be provided by a licensed refrigeration technician and must comply with the relevant local and national codes.

Precautions

- Execute heat insulation work completely on both sides of the gas piping and liquid piping. Otherwise, this can sometimes result in water leakage.
  (When using a heat pump, the temperature of the gas piping can reach up to approximately 120℃. Use insulation which is sufficiently resistant.)
- Also, in cases where the temperature and humidity of the refrigerant piping sections might exceed 30℃ or Rh80%, reinforce the refrigerant insulation(20mm or thicker). Condensation may form on the surface of the insulating material.
- Before rigging tubes, check which type of refrigerant is used.
- Use a pipe cutter and flare suitable for used refrigerant.
- Only use annealed material for flare conncetions.
- Do not mix anything other than the specified refrigerant, such as air, etc.., Inside the refrigerant circuit.
- If the refrigerant gas leaks during the work, ventilate the area. A toxic gas is emitted by the refrigerant gas being exposed to a fire.
- Make sure there is no refrigerant gas leak. A toxic gas may be released by the refrigerant gas leaking indoor and being exposed to flames from an area heater, cooking stove, etc.
- Refer to the table below for the dimensions of flare nuts spaces and the appropriate tightening torque. (Overtightening may damage the flare and cause leaks.)

Pipe gauge (mm)	Tightening torque	Flare dimension A (mm)	Flare shape
Ø6.35	15~16 N. m (153~163 kgf.cm)	8.3~8.7	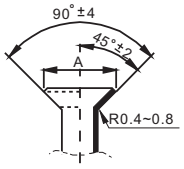
Ø9.52	25~26 N. m (255~265 kgf.cm)	12.0~12.4	
Ø12.7	35~36 N. m (357~367 kgf.cm)	15.4~15.8	
Ø15.9	45~47 N. m (459~480 kgf.cm)	18.6~19.0	

- Check whether the height drop between the indoor unit and outdoor unit, and the length of refrigerant pipe meet the following requirements:

The type of models	Capacity (Btu/h)	Max.allowable piping length	Max.allowable piping height
R410A inverter Split type air conditioner	<15000	25m	10m
	≥15000~<24000	30m	20m
	≥24000~<36000	50m	25m
	≥36000~<60000	65m	30m

3.1 Flaring the pipe end

1) Cut the pipe end with a pipe cutter.
2) Remove burrs with the cut surface facing downward so that the chips do not enter the pipe.

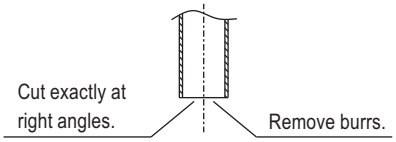

3) Put the flare nut on the pipe.
4) Flare the pipe.

Outer diam. (mm)	A(mm)	
	Max.	Min.
Ø6.35	1.3	0.7
Ø9.52	1.6	1.0
Ø12.7	1.8	1.0
Ø15.9	2.2	2.0

Set exactly at the position shown below.

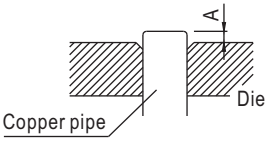

5) Check that the flaring is properly made.

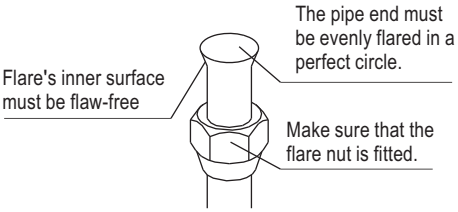

3.2 Refrigerant piping

- Coat the flare both inside and ouside with ether oil or ester oil .

Coat here with ether oil or ester oil

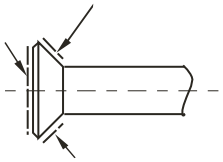

- Align the centres of both flares and tighten the flare nuts 3 or 4 turns by hand. Then tighten them fully with the torque wrenches.

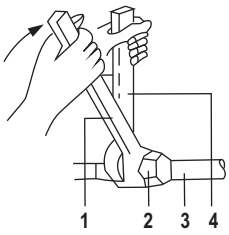

1 Torque wrench
2 Flare nut
3 Piping union
4 Spanner

3.3 Purging air and checking gas leakage

- When piping work is completed, it is necessary to purge the air and check for gas leakage.

WARNING

- Do not mix any substance other than the specified refrigerant into the refrigeration cycle.
- When refrigerant gas leaks occur, ventilate the room as soon as possible.
- The specified refrigerant should always be recovered and never be released directly into the environment.
- Use a vacuum pump for the specified refrigerant. Using the same vacuum pump for different refrigerants may damage the vacuum pump or the unit.

- If using additional refrigerant, perform air purging from the refrigerant pipes and indoor unit using a vacuum pump, than charge additional refrigerant.
- Use a hexagonal wrench(4mm) to operate the stop valve rod.
- All refrigerant pipe joints should be tightened with a torque wrench at the specified tightening torque.

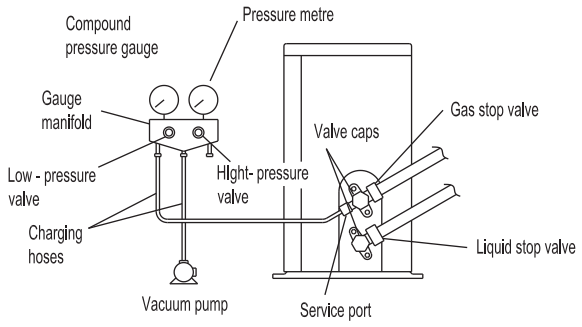

1) Connect projection side of charging hose (which comes from gauge manifold) to gas stop valve's service port.
2) Full open gauge manifold's low-pressure valve (Lo) and completely close its high-pressure valve (Hi)
   (High-pressure valve subsequently requires no operation.)
3) Do vacuum pumping and make sure that the compound pressure gauge reads -0.1MPa (-76cmHg).*1
4) Close gauge manifold's low-pressure valve (Lo) and sop vacuum pump.
   (Keep this state for a few minutes to make sure that the compound pressure gauge pointer does not swing back.)*2
5) Remove caps from liquid stop valve and gas stop valve.
6) Turn the liquid stop valve's rod 90 degrees counterclockwise with a hexagonal wrench to open valve.
   Close it after 5 seconds, and check for gas leakage.
   Using soapy water, check for gas leakage from indoor unit's flare and outdoor unit's flare and valve rods.
   After the check is complete, wipe all soapy water off.
7) Disconnect charging hose from gas stop valve's service port then fully open liquid and gas stop valves.
   (Do not attempt to turn valve rod byond its stop.)
8) Tighten valve caps and service port caps for the liquid and gas stop valves with a torque wrench at the specified torques.

*1. Pipe length vs. Vacuum pump run time

Pipe length	Up to 15m	More than 15m
Run time	Not less than 10 min	Not less than 15min

*2. If the compound pressure gauge pointer swings back, refrigerant may have water content or a loose pipe joint may exists. Check all pipe joints and retighten nuts as needed, then repeat steps 2) through 4).

3.4 Additional refrigerant charge

CAUTION

- Refrigerant may only be charged after performing the leak test and the vacuum pumping.
- Check the type of refrigerant to be used on the machine nameplate. Charging with an unsuitable refrigerant may cause explosions and accidents, so always ensure that the appropriate refrigerant is charged.
- Refrigerant containers shall be opened slowly.

- The outdoor unit is factory charged with refrigerant. Calculate the added refrigerant according to the diameter and the length of the liquid pipe of the outdoor unit/indoor unit connection.

Pipe length and refrigerant amount:

Connective pipe length	Air purging method	Additional amount of refrigerant to be charged	
Less than 5m	Use vacuum pump.	_____	
More than 5m	Use vacuum pump.	Liquid side: Φ6.35mm R410A: (L-5)x15g/m	Liquid side: Φ9.52mm R410A: (L-5)x30g/m

- Be sure to add the proper amount of additional refrigerant. Failure to do so may result in reduced performance.

3.5 Refrigerant pipig work

1) Caution on the pipe handling

- Protect the open end of the pipe against dust and moisture.
- All pipe bends should be as gentle as possible. Use a pipe bender for bending.

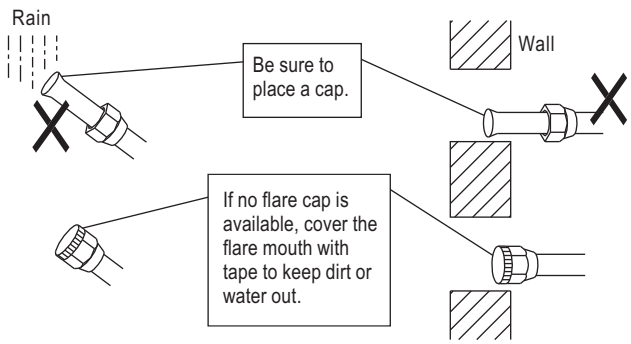

2) **Be sure to insulate both the gas and liquid piping. Use separate thermal insulation pipes for gas and liquid refrigerant pipes. See the figure below.**

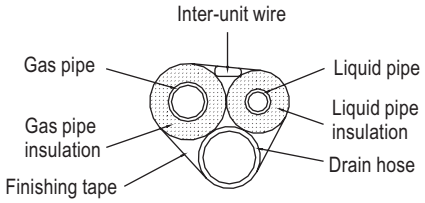

Piping insulation procedure

Gas piping

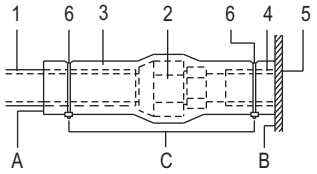

Liquid piping

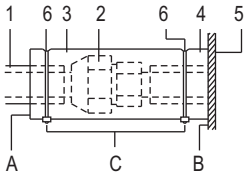

1 Piping insulation material(field supply)
2 Flare nut connection
3 Insulation for fitting (field supply)
4 Piping insulation material (main unit)
5 Indoor unit
6 Clamp (field supply)

A Turn seams up
B Attach to base
C Tighten the part other than the piping insulation material

- For local insulation, be sure to insulate local piping all the way into the pipe connections inside the unit. Exposed piping may cause condensation or may cause burns when touched.
- Make sure that no oil remains on plastic parts of the decoration panel (optional equipment).
  Oil may cause degradation and damage to plastic parts.

4 CONNECT THE DRAIN PIPE

4.1 Install the drain pipes.

- Keep piping as short as possible and slope it downwards at a gradient of at least 1/100 so that air may not remain trapped inside the pipe.
- Keep pipe size equal to or greater than that of the connecting pipe (PVC pipe, nominal diameter 20mm in, outside diameter 25mm).
- Push the drain hose as far as possible over the drain socket, and tighten the metal clamp securely.

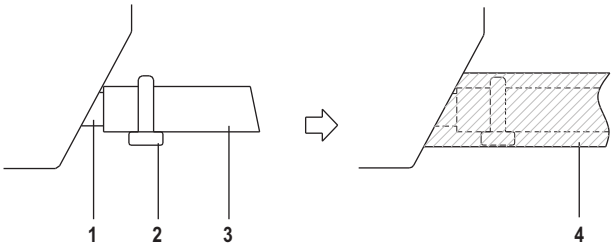

1 Drain socket (attached to the unit)
2 metal clamp
3 Drain hose
4 Insulation (field supply)

- Insulate the drain hose inside the building.
- If the drain hose cannot be sufficiently set on a slope, fit the hose with drain raising piping (field supply).
- Make sure that heat insulation work is executed on the following 2 spots to prevent any possible water leakage due to dew condensation.
  1 Indoor drain pipe.
  2 Drain socket.

5 ELECTRIC WIRING WORK

General instructions

- All field wiring and components must be installed by a licensed electrician and must comply with relevant European and national regulations.
- Use copper wire only.
- Follow the 'Wiring diagram' attached to the unit body to wire the outdoor unit, indoor units and the remote controller.
- A circuit breaker capable of shutting down power supply to the entire system must be installed.
- Note that the operation will restart automatically if the main power supply is turned off and then turned back on again.
- Be sure to ground the air conditioner.
- Do not connect the ground wire to gas pipes, water pipes, lightning rods, or telephone ground wires.
  - Gas pipes: might cause explosions or fire if gas leaks.
  - Water pipes: no grounding effect if hard vinyl piping is used.
  - Telephone ground wires or lightning rods: might cause abnormally highelectric potential in the ground during lightning storms .

Minimum norminal cross-sectional area of conductors:

Rated current of appliance (A)	Nominal cross-sectional area (mm2)
≤6	0.75
>6 and ≤10	1.0
>10 and ≤16	1.5
>16 and ≤25	2.5
>25 and ≤32	4.0
>32 and ≤45	6.0
>45 and ≤60	10.0

NOTE:
The cable size and the current of the fuse or switch are determined by the maximum current indicated on the nameplate which located on the side panel of the unit. Please refer to the nameplate before selecting the cable, fuse and switch.

The specification of power

MODEL(Btu/h)		18K	24K	30K~36K	42K~48K	55K	36K	42K~55K
POWER (indoor)	PHASE	1Phase	1Phase	1Phase	1Phase	1Phase	1Phase	1Phase
	VOLTAGE	220-240V	220-240V	220-240V	220-240V	220-240V	220-240V	220-240V
CIRCUIT BREAKER/FUSE(A)		15/10	15/10	15/10	15/10	15/10	15/10	15/10
POWER (outdoor)	PHASE	1Phase	1Phase	1Phase	1Phase	1Phase	3Phase	3Phase
	VOLTAGE	220-240V	220-240V	220-240V	220-240V	220-240V	380-415V	380-415V
CIRCUIT BREAKER/FUSE(A)		30/20	30/20	40/30	40/35	50/40	30/20	30/20

How to connect wiring

- Remove the control box lid of the indoor unit.
  Remove the cover of the outdoor unit.
- Follow the "Wiring diagram label" attached to the indoor unit's control box lid to wire the outdoor unit, indoor unit and the remote controller.
  Securely fix the wires with a field supplied champ.
- Attach the cover of the outdoor unit.

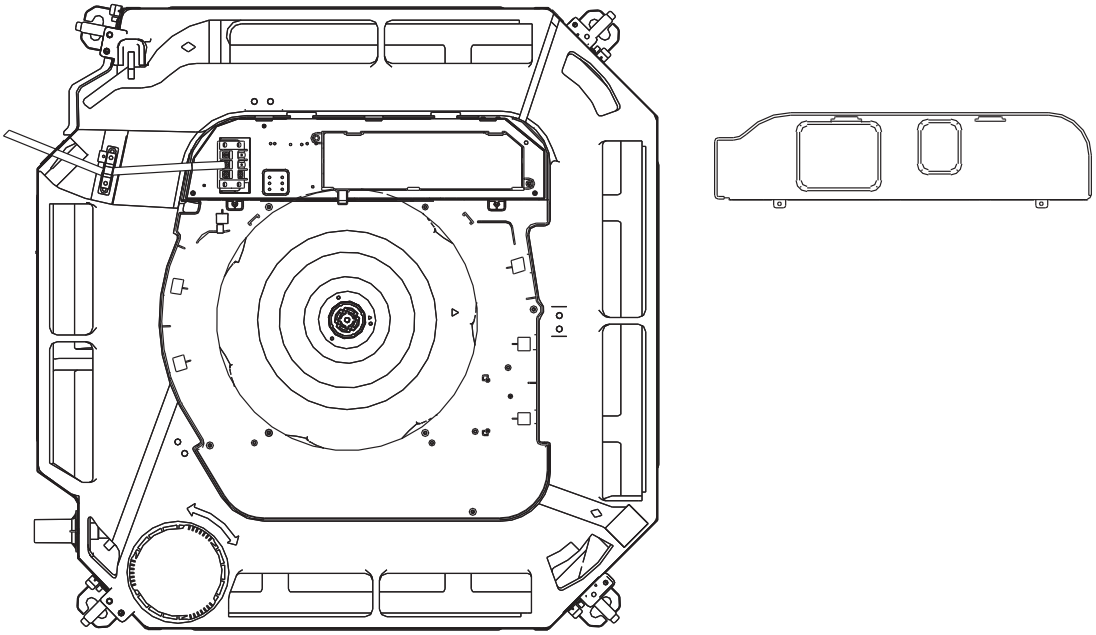

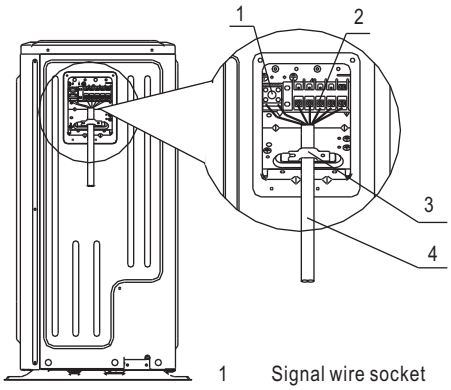

1 Signal wire socket
2 Power supply terminal block
3 Clamp for wiring
4 Wiring between units

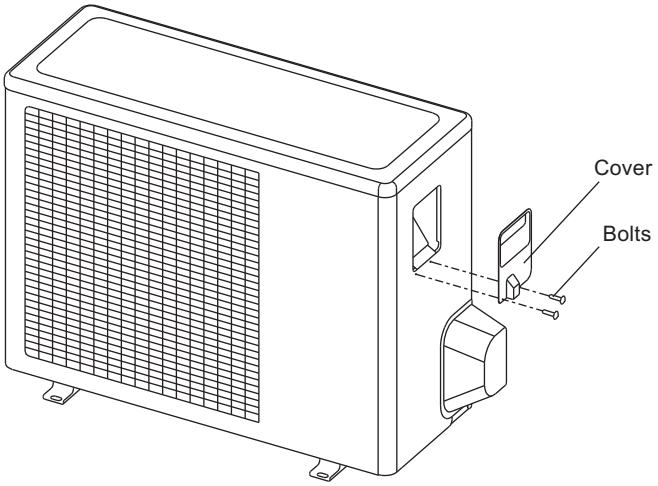

Precautions

1 Observe the notes mentioned below when wiring to the power supply terminal board.
   - Do not connect wires of different gauge to the same power supply terminal. (Looseness in the connection may cause overheating.)
   - When connecting wires of the same gauge, connect them according to the figure.

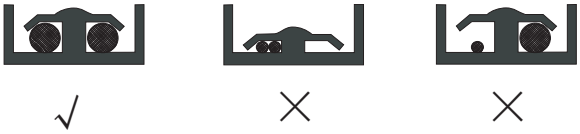

Use the specified electric wire. Connect the wire securely to the terminal. Lock the wire down without applying excessive force to the terminal. (Tightening torque: 1.31N.m±10%).

   - When attaching the control box lid, make sure not to pinch any wires.
   - After all wiring connections are done, fill in any gaps in the casing wiring holes with putty or insulation material (field supply) thus to prevent small animals or dirt from entering the unit from outside and causing short circuits in the control box.

2 Do not connect wires of different gauge to the same grounding terminal. Looseness in the connection may deteriorate the protection.

3 Use only specified wires and tightly connect wires to the terminals. Be careful that wires do not place external stress on the terminals. Keep wiring in neat order so that they do not obstruct other equipment such as popping open the service cover. Make sure the cover closes tight. Incomplete connections could result in overheating, and in the worst case, electric shock or fire.

6 REFRIGERANT PIPE (the unit with the twins function)

6.1 Length and drop height permitted of the refrigerant piping

Note: Reduced length of the branching tube is the 0.5m of the equivalent length of the pipe.

		Max value		Piping
Pipe length	Total pipe length (Actual)	18K+18K	30m	L+L1+L2
		24K+24K/ 30K+30K	50m	
	(farthest from the line pipe branch)	15m		L1;L2
	(farthest from the line pipe branch)	10m		L1-L2
Drop height	Indoor unit-outdoor unit drop height	20m		H1
	Indoor unit to indoor unit drop height	0.5m		H2

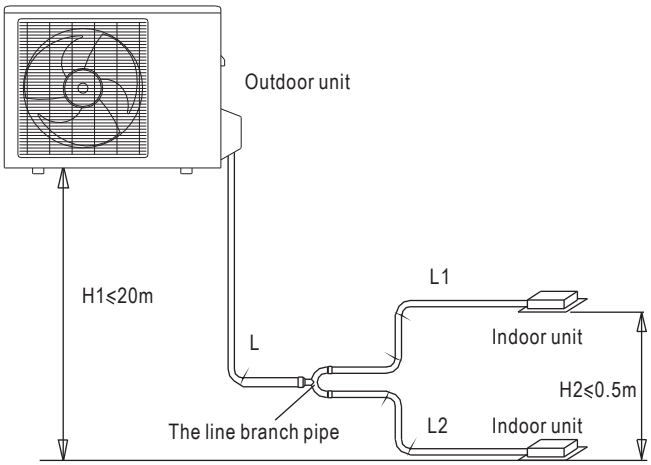

Note: All used branch pipe must be produced by Midea,otherweise it causes malfunction. The indoor units should be installed equivalently at the both side of the U type branch pipe.

The branching pipe must be installed horizontally, error angle of it should not large than 10°. Otherwise, malfunction will be caused.

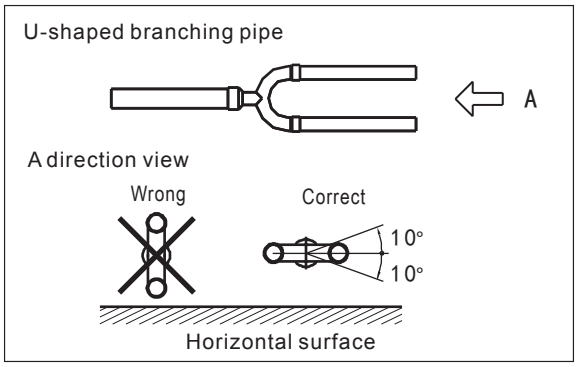

6.2 Refrigerant amount to be added

Calculate the added refrigerant according to the diameter and the length of the liquid side pipe of the outdoor/indoor unit connection. The refrigerant is R410A.

Pipe size on liquid side	Refrigerant to be added per meter
Ø6.35	0.015kg
Ø9.5	0.030kg

7 TEST OPERATION

Make sure the control box lids are closed on the indoor and outdoor units.

Refer to "For the following items, take special care during construction and check after installation is finished" on page 2.

After finishing the construction of refrigerant piping, drain piping, and electric wiring, conduct test operation accordingly to protect the unit.

Test operation after installing decoration panel

1 Open the gas side stop valve.
2 Open the liquid side stop valve.
3 Electrify crank case heater for 6 hours.
4 Set to cooling operation with the remote controller and start operation by pushing ON/OFF button.
5 Check the following points. If there is any malfunction, please resolve it according to the chapter "Troubleshooting" in the "Owner's Manual".

■ The indoor unit
- Whether the switch on the remote controller works well.
- Whether the buttons on the remote controller works well.
- Whether the air flow louver moves normally.
- Whether the room temperature is adjusted well.
- Whether the indicator lights normally.
- Whether the temporary buttons works well.
- Whether there is vibration or abnormal noise during operation.
- Whether the drainage flows smoothly.

■ The outdoor unit
- Whether there is vibration or abnormal noise during operation.
- Whether the generated wind, noise, or condensed of by the air conditioner have influenced your neighborhood.
- Whether any of the refrigerant is leaked.

6 Turn off the main power supply after operation.

A protection feature prevents the air conditioner from being activated for approximately 3 minutes when it is restarted immediately after shut off.

* The design and specifications are subject to change without prior notice for product improvement.
Consult with the sales agency or manufacturer for details.

- Εάν η μονάδα λειτουργήσει σε σύστημα MULTI, ανατρέξτε στα αντίστοιχα εγχειρίδια εγκατάστασης & λειτουργίας που συνοδεύουν την εξωτερική μονάδα.

ΠΕΡΙΕΧΟΜΕΝΑ ΣΕΛΙΔΑ

ΟΔΗΓΙΕΣ ΑΣΦΑΛΕΙΑΣ.....1
ΠΛΗΡΟΦΟΡΙΕΣ ΕΓΚΑΤΑΣΤΑΣΗΣ.....2
ΠΑΡΕΛΚΟΜΕΝΑ.....3
ΕΓΚΑΤΑΣΤΑΣΗ ΕΣΩΤΕΡΙΚΗΣ ΜΟΝΑΔΑΣ.....4
ΕΓΚΑΤΑΣΤΑΣΗ ΕΞΩΤΕΡΙΚΗΣ ΜΟΝΑΔΑΣ.....9
ΤΟΠΟΘΕΤΗΣΗ ΨΥΚΤΙΚΩΝ ΣΩΛΗΝΩΣΕΩΝ.....11
ΣΥΝΔΕΣΗ ΑΓΩΓΟΥ ΑΠΟΣΤΡΑΓΓΙΣΗΣ.....13
ΣΥΝΔΕΣΜΟΛΟΓΙΑ.....14
ΛΕΙΤΟΥΡΓΙΑ ΖΕΥΓΟΥΣ ΕΣΩΤΕΡΙΚΩΝ ΜΟΝΑΔΩΝ.....16
ΔΟΚΙΜΑΣΤΙΚΗ ΛΕΙΤΟΥΡΓΙΑ.....16

ΟΔΗΓΙΕΣ ΑΣΦΑΛΕΙΑΣ

- Φυλάξτε αυτό το εγχειρίδιο μαζί με το εγχειρίδιο χρήστη για μελλοντική αναφορά.
- Πριν την εγκατάσταση διαβάστε προσεκτικά το παρόν εγχειρίδιο.
- Πριν την εγκατάσταση διαβάστε προσεκτικά τις οδηγίες ασφαλείας.

Οι οδηγίες ασφαλείας που αναφέρονται εδώ είναι χωρισμένες σε 2 κατηγορίες.

ΠΡΟΕΙΔΟΠΟΙΗΣΗ

Εάν αγνοήσετε αυτές τις οδηγίες μπορεί να προκληθεί βλάβη στη μονάδα, τραυματισμός ή ακόμα και θάνατος.

ΠΡΟΣΟΧΗ

Η αγνόηση των συγκεκριμένων οδηγιών μπορεί να προκαλέσει τραυματισμό ή βλάβη στην μονάδα.

Αφού ολοκληρωθεί η εγκατάσταση, βεβαιωθείτε πως η μονάδα κατά την εκκίνηση λειτουργεί σωστά. Καθοδηγήστε τον χρήστη για τη σωστή λειτουργία της μονάδας. Επιπλέον, ενημερώστε τους χρήστες πως το συγκεκριμένο εγχειρίδιο πρέπει να φυλάγεται μαζί με το εγχειρίδιο χρήστη για μελλοντική αναφορά.

ΠΡΟΕΙΔΟΠΟΙΗΣΗ

Βεαβιωθείτε πως η εγκατάσταση ή οποιαδήποτε επισκευή στην κλιματιστική μονάδα έχει γίνει από εξειδικευμένο προσωπικό.

Ακατάλληλη εγκατάσταση, επισκευή ή συντήρηση μπορεί να προκαλέσει ηλεκτροπληξία, βραχυκύκλωμα, διαρροή, πυρκαγιά ή άλλη βλάβη στη μονάδα.

Βεβαιωθείτε πως η εγκατάσταση έχει γίνει σύμφωνα με το συγκεκριμένο εγχειρίδιο. Εάν η εγκατάσταση είναι ελλιπής, θα προκληθεί διαρροή νερού, ηλεκτροπληξία και πυραγιά.

Όταν η κλιματιστική μονάδα εγκαθίσταται σε μικρό χώρο, φροντίστε σε περίπτωση κάποιας διαρροής ψυκτικού υγρού η συγκέντρωση ψυκτικού υγρού να μην υπερβάινει τα επιτρεπτά όρια ασφαλείας. Για περισσότερες πληροφορίες επικοινωνήστε με τον προμηθευτή σας. Η υπερβολική συγκέντρωση ψυκτικού υγρού μπορεί να προκαλέσει έλλειψη οξυγόνου.

Χρησιμοποιήστε για την εγκατάτσταση τα παρελκόμενα και τα προδιαγεγραμμένα εξαρτήματα.
Σε αντίθετη περίπτωση μπορεί να προκληθεί πτώση της μονάδας, διαρροή νερού, ηλεκτροπληξία ή πυρκαγιά.

Εγκαταστήστε τη μονάδα σε σταθερή βάση η οποία είναι ικανή να αντέξει το βάρος της.
Εάν η βάση δεν είναι στιβαρή ή η εγκατάσταση δεν έχει γίνει σωστά, μπορεί να προκληθεί πτώση και τραυματισμός.

Η μονάδα πρέπει να εγκαθίσταται 2-3m πάνω από το έδαφος.

Η μονάδα δεν πρέπει να εγκαθίσταται σε χώρους με υψηλή υγρασία.

Πριν τη συνδεσμολογία, βεβαιωθείτε πως η μονάδα δεν είναι συνδεδεμένη με την παροχή ρεύματος.

Η μονάδα πρέπει να είναι τοποθετημένη με τρόπο ώστε να είναι προσβάσιμη η πρίζα.

Στη συσκευασία της μονάδας πρέπει να είναι σημειωμένη η κατεύθυνση ροής του ψυκτικού υγρού.

Για την ηλεκτρολογική σύνδεση θα πρέπει να ακολουθούνται οι εθνικοί κανονισμοί και οδηγίες. Θα πρέπει να χρησιμοποιηθεί ξεχωριστό κύκλωμα.
Εάν η χωρητικότητα του κυκλώματος δεν είναι επαρκής ή αν η ηλεκτρολογική σύνδεση δεν είναι σωστή, θα προκληθεί ηλεκτροπληξία ή πυρκαγιά.

Χρησιμοποιήστε προδιαγραμένο καλώδιο και συνδέστε το σφιχκτά στην τερματική επαφή.
Εάν η σύνδεση δεν έχει γίνει σωστά, θα προκληθεί υπερθέρμανση ή πυρκαγιά.

Η οδήγηση των καλωδίων πρέπει να γίνει με τρόπο ώστε το κάλυμμα της πλακέτας να κλείνει σωστά.
Εάν το κάλυμμα δεν κλείνει σωστά, θα προκληθεί υπερθέμανση, ηλεκτροπληξία ή πυρκαγιά.

Εάν φθαρεί το καλώδιο τροφοδοσίας, πρέπει να αντικατασταθεί από εξειδικευμένο προσωπικό, για την αποφυγή τραυματισμού.

Στο κύκλωμα θα πρέπει να τοποθετηθεί διακόπτης με απόσταση ανάμεσα στους πόλους τουλάχιστον 3mm.

Κατά τη σύνδεση των σωλήνων, βεβαιωθείτε ότι δεν έχει εισέλθει αέρας στο ψυκτικό κύκλωμα.
Μπορεί να προκληθεί πτώση απόδοσης, υψηλή πίεση στο ψυκτικό κύκλωμα, έκρηξη και τραυματισμός.

Μην κάνετε μετατροπές στο καλώδιο τροφοδοσίας και μην χρησιμοποιείτε μπαλαντέζα. Μην χρησιμοποιείτε το ίδιο ηλεκτρικό κύκλωμα και για άλλες συσκευές.
Μπορεί να προκληθεί ηλεκτροπληξία ή πυρκαγιά.

Εγκαταστήστε τη μονάδα αφού έχετε λάβει υπόψη σας καιρικά φαινόμενα, όπως δυνατούς ανέμους, τυφώνες ή σεισμούς.
Ελλιπής εγκατάσταση μπορεί να προκαλέσει πτώση της μονάδας και τραυματισμούς.

Εάν προκληθεί διαρροή ψυκτικού υγρού κατά την εγκατάσταση, αερίστε αμέσως τον χώρο.
Εάν το ψυκτικό υγρό έρθει σε επαφή με φωτιά μπορεί να παραχθεί τοξικό αέριο.

Η θερμοκρασία του ψυκτικού κυκλώματος θα είναι υψηλή.
Βεβαιωθείτε πως το καλώδιο ενδοεπικοινωνίας βρίσκεται σε μακρινή απόσταση από τον χαλκοσωλήνα.

Αφού ολοκληρωθούν οι εργασίες εγκατάστασης, ελέγξτε για τυχόν διαρροή ψυκτικού υγρού.
Εάν υπάρχει διαρροή ψυκτικού υγρού στον χώρο και έρθει σε επαφή με πηγή θερμότητας, όπως αερόθερμο, σόμπα ή κουζίνα, μπορεί να παραχθεί τοξικό αέριο.

ΠΡΟΣΟΧΗ

Βεβαιωθείτε πως υπάρχει γείωση στη μονάδα.
Μην συνδέετε το καλώδιο γείωσης σε σωλήνες αερίου ή νερού, σε γραμμές ρεύματος ή τηλεφωνικές. Ελλιπής γείωση μπορεί να προκαλέσει ηλεκτροπληξία.

Βεβαιωθείτε πως έχει τοποθετηθεί ρελέ διαφυγής.. Η απουσία του μπορεί να προκαλέσει ηλεκτροπληξία.

Συνδέστε πρώτα τα καλώδια της εξωτερικής μονάδας και κατόπιν της εσωτερικής μονάδας.
Μην συνδέσετε την μονάδα με την παροχή ρεύματος αν δεν έχετε ολοκληρώσει την σύνδεση των σωληνώσεων και των καλωδίων.

Ακολουθώντας τις οδηγίες του παρόντος εγχειριδίου, τοποθετήστε τον αγωγό αποστράγγισης για την διασφάλιση της απορροής συμπυκνωμάτων και βεβαιωθείτε πως οι σωλήνες έχουν μονωθεί.
Αν δεν υπάρχει αγωγός αποστράγγισης μπορεί να προκληθεί διαρροή νερού και φθορά περιουσίας.

Εγαταστήστε την εσωτερική και εξωτερική μονάδα, το καλώδιο τροφοδοσίας και τα καλώδια επικοινωνίας τουλάχιστον σε 1m απόσταση από τηλεοράσεις η ραδιόφωνα, για την αποφυγή παρεμβολών ή θορύβου.
Ανάλογα με τα ραδιοκύματα, το 1m μπορεί να μην είναι επαρκές για την αποφυγή θορύβου.

Η κλιματιστική μονάδα δεν πρέπει να χρησιμοποιείται από μικρά παιδιά και άτομα με ειδικές ανάγκες χωρίς επίβλεψη.

Μην τοποθετείτε την κλιματιστική μονάδα σε κάποια από τις παρακάτω θέσεις:

- Σε μέρος που μπορεί να υπάρχει κοντά βενζίνη.
- Κοντά σε ακτές.
- Σε περιοχές όπου ο αέρας περιέχει εύφλεκτα αέρια
- Σε μέρη που υπάρχει απότομη αυξομείωση τάσης (σε εργοστάσια)
- Σε λεωφορία ή καμπίνες
- Σε κουζίνες που ο αέρας του περιέχει πολλά αέρια λαδιού
- Σε μέρος όπου υπάρχουν ισχυρά ηλεκτρομαγνητικά κύματα.
- Σε μέρος όπου υπάρχουν εύφλκτα υλικά ή αέρια
- Σε μέρη όπου εξατμίζονται όξινα ή αλκαλικά υγρά
- Σε μέρη με άλλες ειδικές συνθήκες.

Η εγκατάσταση της κλιματιστικής μονάδας πρέπει να γίνεται σύμφωνα με τους εθνικούς κανονισμούς.

Μην λειτουργείτε τη μοναδα σε χώρους με υψηλή υγρασία.

Θα πρέπει να τοποθετηθεί στο κύκλωμα ένας διακόπτης ο οποίος να έχου τουλάχιστον 3mm απόσταση σε κάθε πόλο και η διαρροή του ρεύματος να μην ξεπερνάει τα 10mA. Θα πρέπει το ρεύμα στην διάταξη RCD να μην ξεπερνάει τα 30mA.

ΠΛΗΡΟΦΟΡΙΕΣ ΕΓΚΑΤΑΣΤΑΣΗΣ

- Για την σωστή εγκατάσταση της κλιματιστικής μονάδας, διαβάστε πρώτα το παρόν εγχειρίδιο εγκατάστασης
- Η κλιματιστική μονάδα πρέπει να εγκαθίσταται από εξειδικευμένο προσωπικό.
- Κατά την εγκατάσταση της εσωτερικής μονάδας ή των σωληνώσεων της, ακολουθήστε αυστηρά τις οδηγίες του παρόντος εγχειριδίου.
- Εάν η κλιματιστική μονάδα εγκατασταθεί σε μεταλλικό μέρος ενός κτιρίου, θα πρέπει να είναι ηλεκτρικά μονωμένο σύμφωνα με τα ηλεκτρολογικά πρότυπα.
- Όταν ολοκληρωθεί η εγκατάσταση της μονάδας, ενεργοποιήστε την αφού κάνετε έναν τελικό έλεγχο.
- Δεν θα υπάρξει ενημέρωση για οποιαδήποτε αλλαγή στο παρόν εγχειρίδιο λόγω βελτίωσης της κλιματιστικής μονάδας.

ΣΕΙΡΑ ΕΓΚΑΤΑΣΤΑΣΗΣ

- Εγκατάσταση της εσωτερικής μονάδας
- Εγκατάσταση της εξωτερικής μονάδας
- Τοποθέτηση ψυκτικών σωληνώσεων
- Σύδεση του αγωγού αποστράγγισης
- Σύνδεση καλωδίων
- Λειτουργία ζεύγους εσωτερικών μονάδων
- Δοκιμαστική λειτουργία

ΠΑΡΕΛΚΟΜΕΝΑ ΕΞΑΡΤΗΜΑΤΑ

Ελέγξτε πως τα παρακάτω παρελκόμενα εξαρτήματα υπάρχουν. Εάν υπάρχουν και κάποια επιπλ'εον, φυλάξτε τα προσεκτικά.

	ΠΕΡΙΓΡΑΦΗ	ΣΧΗΜΑ	ΠΟΣΟΤΗΤΑ
Σωληνώσεις και παρελκόμενα	1. Χάρτινη πινακίδα εγκατάστασης	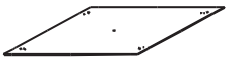	1 (Σε ορισμένα μοντέλα)
	2. Περίβλημα μόνωσης	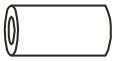	1 (Σε ορισμένα μοντέλα)
	3. Εξωτερικό μονωτικό περίβλημα		1 (Σε ορισμένα μοντέλα)
	4.Εξωτερικός σφιγκτήρας σωλήνα		1 (Σε ορισμένα μοντέλα)
Παρελκόμενα αγωγού αποστράγγισης (για ψύξη και θέρμανση)	5. Σύνδεσμος αποστράγγισης		1 (Σε ορισμένα μοντέλα)
	6.Ασφαλιστικός δακτύλιος		1 (Σε ορισμένα μοντέλα)
Ασύρματο τηλεχειριστήριο & η βάση του	7. Ασύρματο τηλεχειριστήριο		1 (Σε ορισμένα μοντέλα)
	8. Βάση ασύρματου τηλεχειριστηρίου		1 (Σε ορισμένα μοντέλα)
	9. Βίδες (ST2.9x10-C-H)		2 (Σε ορισμένα μοντέλα)
	10. Αλκαλικές μπαταρίες ξηρού τύπου (Am4)	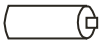	2 (Σε ορισμένα μοντέλα)
	11. Εγχειρίδιο χρήσης τηλεχειριστηρίου	—	1 (Σε ορισμένα μοντέλα)
Ενσύρματο χειριστήριο & η βάση του	12. Ενσύρματο χειριστήριο	—	1 (Σε ορισμένα μοντέλα)
	13. Εγχειρίδιο χρήσης ενσύρματου χειριστηρίου	—	1 (Σε ορισμένα μοντέλα)
	14. Εγχειρίδιο εγκατάστασης ενσύρματου χειριστηρίου	—	1 (Σε ορισμένα μοντέλα)
Παρελκόμενα εγκατάστασης (Στην κλιματιστική μονάδα που έχετε προμθευτεί μπορεί να μην παρέχονται)	15. Άγκιστρο κρέμασης	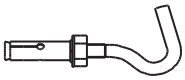	4
	16. Ντίζα		4
EMC & τα παρελκόμενα (σε ορισμένα μοντέλα)	17. Μαγνητικός δακτύλιος (στρέψτε τα ηλεκτρικά καλώδια L & N γύρω από τον μαγνητικό δακτύλιο 5 φορές)	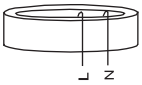	1
Άλλα	18. Εγχειρίδιο χρήστη	—	1
	19. Εγχειρίδιο εγκατάστασης	—	1

1. ΕΓΚΑΤΑΣΤΑΣΗ ΤΗΣ ΕΣΩΤΕΡΙΚΗΣ ΜΟΝΑΔΑΣ

1.1 Θέση εγκατάστασης

Η θέση εγκατάστασης πρέπει να ακολουθεί τις παρακάτω απαιτήσεις:

- Υπάρχει αρκετός χώρος για την εγκατάσταση και τη συντήρηση.
- Ο οροφή είναι οριζόντια και μπορεί να αντέξει το βάρος της εσωτερικής μονάδας.
- Δεν παρεμποδίζονται η είσοδος και έξοδος του αέρα και η επιρροή από τον εξωτερικό αέρα είναι ελάχιστη.
- Η παροχή αέρα μπορεί να καλύψει όλο τον χώρο.
- Να είναι εύκολη η οδήγηση των ψυκτικών σωληνώσεων και του αγωγού αποστράγγισης.
- Δεν υπάρχει απευθείας ακτινοβολία από θερμαντικά σώματα.

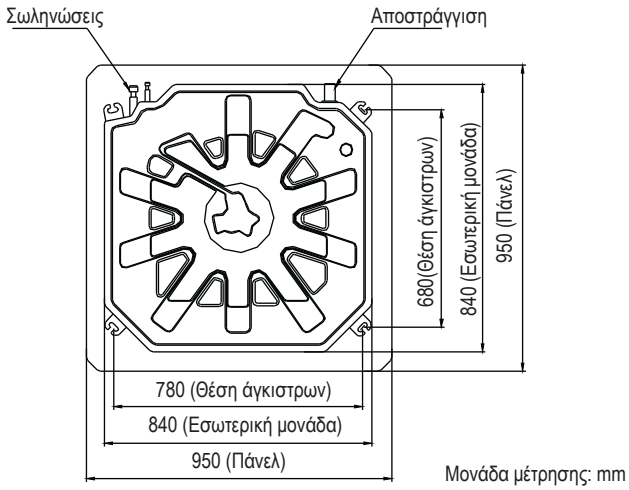

Εικ. 1-1

ΠΡΟΣΟΧΗ

Εγαταστήστε την εσωτερική και εξωτερική μονάδα, το καλώδιο τροφοδοσίας και τα καλώδια επικοινωνίας τουλάχιστον σε 1m απόσταση από τηλεοράσεις η ραδιόφωνα, για την αποφυγή παρεμβολών ή θορύβου. (Ανάλογα με τα ραδιοκύματα, το 1m μπορεί να μην είναι επαρκές για την αποφυγή θορύβου.)

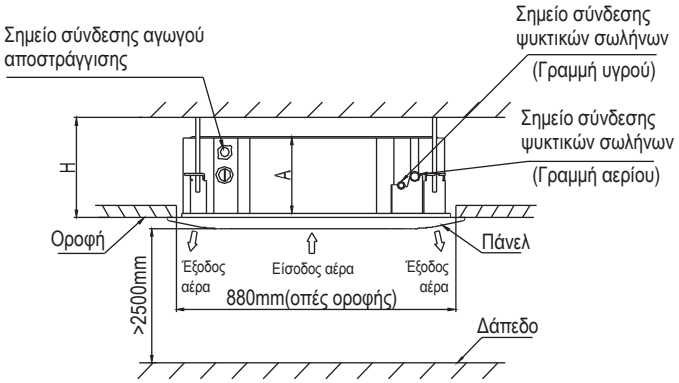

Εικ. 1-2

ΣΗΜΕΙΩΣΗ

Όλες οι εικόνες στο παρόν εγχειρίδιο είναι αναφορικές. Ενδέχεται να υπάρχουν διαφορές με την κλιματιστική μονάδα που έχετε προμηθευτεί (ανάλογα το μοντέλο).

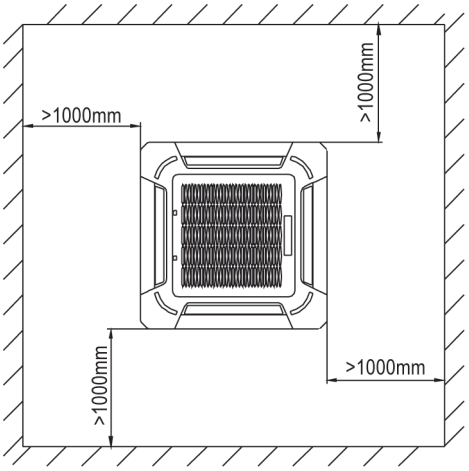

Εικ. 1-3

Μονάδα μέτρησης: mm

ΜΟΝΤΕΛΟ (Btu/h)	A	H
18K	205	235
24K/30K/36K/42K	245	275
48K/55K	287	317

1.2 Εγκατάσταση της εσωτερικής μονάδας

■ Υπάρχουσα οροφή (να είναι οριζόντια)

1 Δημιουργήστε στην οροφή ένα τετράγωνο άνοιγμα 880x880mm σύμφωνα με το σχήμα της χάρτινης πινακίδας εγκατάστασης. (Ανατρέξτε στην Εικ. 1-2)
- Το κέντρο του ανοίγματος πρέπει να είναι ίδιο με αυτό της εσωτερικής μονάδας.
- Επιλέξτε τα μήκη και τις εξοδους των ψυκτικών σωληνώσεων, του αγωγού αποστράγγισης και των καλωδίων.
- Για την εξισορρόπηση της οροφής και την αποφυγή κραδασμών, ενισχύστε την οροφή αν κριθεί αναγκαίο.

2 Επιλέξτε τη θέση των άγκιστρων εγκατάστασης σύμφωνα με τις οπές στην χάρτινη πινακίδα εγκατάστασης.
- Στις επιλεγμένες θέσεις στην οροφή διανοίξτε 4 οπές Φ12mm και με 45-50mm βάθος. Έπειτα εισάγετε τα άγκιστρα κρέμασης.
- Τοποθετήστε την κοίλη πλευρά των ντίζων προς τα άγκιστρα κρέμασης. Επιλέξτε το μήκος από το ύψος της οροφής και κόψτε το κομμάτι που δεν χρειάζεται.
- Εάν η οροφή είναι πολύ ψηλά, ορίστε το μήκος σύμφωνα με τις πραγματικές συνθήκες.

3 Ρυθμίστε τα εξαγωνικά παξιμάδια στις 4 ντίζες ομοιόμορφα, για να εξασφαλίσετε την ισορροπία της εσωτερικής μονάδας.
- Εάν ο αγωγός αποστράγγισης είναι στρεβλομένος, θα προκληθεί διαρροή νερού λόγω δυσλειτουργίας του φλοτέρ.
- Βεβαιωθείτε πως τα κενά ανάμεσα στην μονάδα και τις 4 πλευρές της οροφής είναι ίδια. Το χαμηλότερο μέρος της μονάδας θα πρέπει να βρίσκεται 10-12mm μέσα στην οροφή. (Ανατρέξτε στην Εικ. 1-4).
- Γενικά το L είναι το μισό του μήκους της βίδας της ντίζας. (Ανατρέξτε στην Εικ. 1-4)
- Στερεώστε τη μονάδα σφίγγοντας τα παξιμάδια αφού έχετε τοποθετήσει σωστά τη μονάδα. (Ανατρέξτε στην Εικ. 1-5)

■ Νεόκτιστα σπίτια και οροφές

1 Όταν πρόκειται για νεόκτιστο σπίτι, τα άγκιστρα κρέμασης μπορεί να υπάρχουν ήδη τοποθετημένα (ανατρέξτε στο βήμα 2 παραπάνω). Θα πρέπει σε αυτή την περίπτωση όμως να είναι ικανά να αντέξουν το βάρος της εσωτερικής μονάδας και να μην χαλαρώσουν εξαιτίας συρρύκνωσης του σκυροδέματος.

2 Μετά την εγκατάσταση της εσωτερικής μονάδας, τοποθετήστε πάνω στη μονάδα την χάρτινη πινακίδα εγκατάστασης με βίδες και παξιμάδια (M6X12) για να ορίσετε τα μεγέθη και τις θέσεις των οπών που θα διανοιχτούν στην οροφή (Ανατρέξτε στην Εικ. 1-6).
- Πριν την εγκατάσταση βεβαιωθείτε πως η οροφή είναι οριζόντια και επίπεδη.
- Ανατρέξτε στο βήμα 1 όπως περιγράφεται παραπάνω.

3 Για την εγκατάσταση ανατρέξτε στο βήμα 3 παραπάνω.

4 Αφαιρέστε την χάρτινη πινακίδα εγκατάστασης.

ΠΡΟΣΟΧΗ

Μετά την ολοκλήρωση της εγκατάστασης της εσωτερικής μονάδας, σφίξτε τις 4 βίδες και τα παξιμάδια (M6X12) για να διασφαλίσετε πως έχει στερεωθεί σωστά.

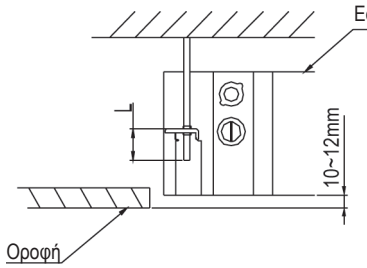

Εικ. 1-4

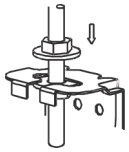

Εικ. 1-5

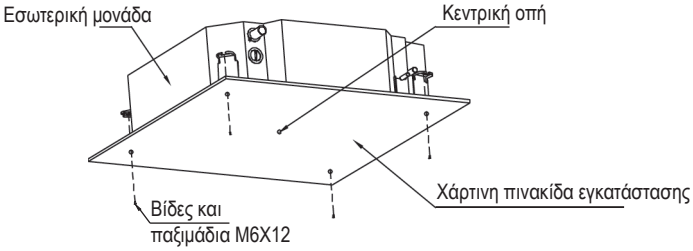

Εικ. 1-6

1.3 Εγκατάσταση του πάνελ

ΠΡΟΣΟΧΗ

Μην ακουμπάτε το πάνελ στο δάπεδο ή στον τοίχο και μην το χτυπάτε.

1 Αφαιρέστε το πλέγμα εισόδου αέρα.

■ Σπρώξτε τα 2 κλιπ προς τη μέση ταυτόχρονα και ανασηκώστε τα. (Ανατρέξτε στην Εικ. 1-7)

■ Ανασηκώστε το πλέγμα σε μια γωνία 45 μοίρες και αφαιρέστε το. (Ανατρέξτε στην Εικ. 1-8)

2 Αφαιρέστε τα καλύμματα από τις 4 γωνίες

■ Ξεβιδώστε τις βίδες, χαλαρώστε τα σχοινάκια από τα καλύμματα και αφαιρέστε τα (Ανατρέξτε στην Εικ. 1-9)

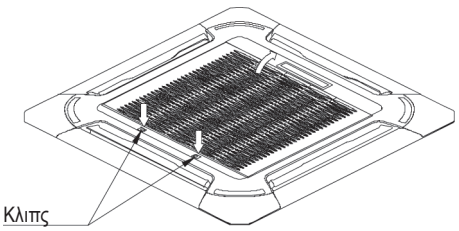

Εικ. 1-7

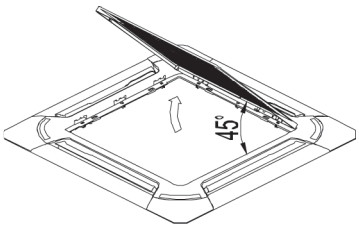

Εικ. 1-8

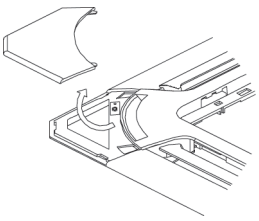

Εικ. 1-9

3 Εγκατάσταση του πάνελ

- Ευθυγραμμίστε το μοτέρ των περσίδων με το σημείο σύνδεσης των σωλήνων της εσωτερικής μονάδας. (Ανατρέξτε στην Εικ. 1-10)

- Στερεώστε τα άγκιστρα του πάνελ στην πλευρά του μοτέρ κίνησης των περσίδων και τις απέναντι πλευρές στα άγκιστρα που βρίσκονται στη λεκάνη αποχέτευσης συμπυκνωμάτων (Ανατρέξτε στην Εικ. 1-10.1). Έπειτα στερεώστε τα άλλα 2 άγκιστρα του πάνελ στα αντίστοιχα της εσωτερικής μονάδας (Ανατρέξτε στην Εικ. 1-10.2).

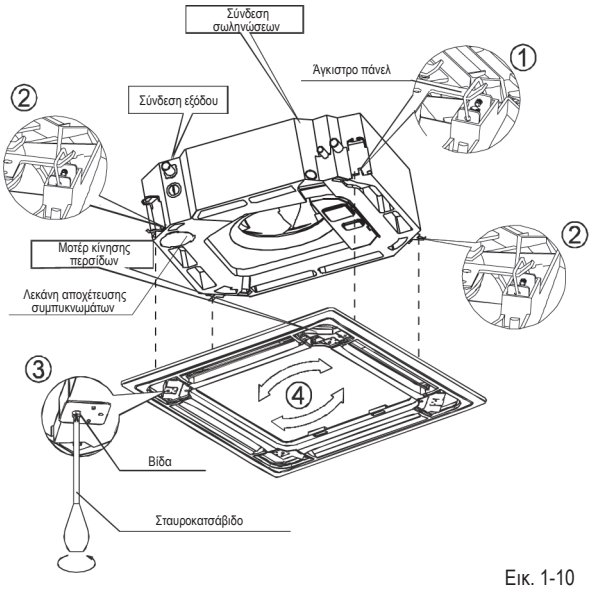

Εικ. 1-10

ΠΡΟΣΟΧΗ

Μην τυλίγετε το καλώδιο του μοτέρ κίνησης των περσίδων στο αεροστεγές σπογγώδες υλικό ασφαλείας.

- Τοποθετήστε τις 4 βίδες στο πάνελ ώστε να είναι οριζόντιο και βιδώστε τις στην οροφή. (Ανατρέξτε στην Εικ. 1-10.3)
- Τοποθετήστε το πάνελ με τη φορά του βέλους όπως φαίνεται στην Εικ. 1-10.4 ώστε το κέντρο του να είναι ίδιο με αυτό του ανοίγματος της οροφής. Βεβαιωθείτε ότι τα 4 άγκιστρα στις γωνίες έχουν στερεωθεί σωστά.
- Συνεχίστε να βιδώνετε τις βίδες εώς ότου το πάχος του αφρώδους υλικού μεταξύ της εσωτερικής μονάδας και του πάνελ να μειωθεί στα 4-6mm. Τα άκρα του πάνελ πρέπει να εφάπτονται καλά στην οροφή. (Ανατρέξτε στην Εικ. 1-11)
- Στην Εικ. 1-12 φαίνεται η δυσλειτουργία που θα προκληθεί αν δεν γίνει σωστά η τοποθέτηση.
- Εάν σφίξετε τις βίδες και υπάρχει κενό ανάμεσα στο πάνελ και την οροφή, θα πρέπει να τροποποιηθεί το ύψος της εσωτερικής μονάδας (Ανατρέξτε στην Εικ. 1-13 αριστερά).
- Μπορείτε να τροποιήσετε το ύψος της εσωτερικής μονάδας από τα ανοίγματα στις 4 γωνίες του πάνελ, εφόσον δεν επηρεάζεται το μανομετρικό και η αποστράγγιση της μονάδας (Ανατρέξτε στην Εικ. 1-13 δεξιά).

4 Κρεμάστε το πλέγμα εισόδου του αέρα στα πάνελ και συνδέστε τις επαφές του μοτέρ κίνησης των περσίδων των καλωδίων επικοινωνίας στην εσωτερική μονάδα.

5 Επανατοποθετήστε το πλέγμα εισόδου αέρα με την ίδια διαδικασία με αντίστροφη σειρά.

6 Επανατοποθέτηση τα καλύμματος εγκατάστασης.

- Δέστε το σχοινάκι του καλύμματος στην βίδα. (Ανατρέξτε στην Εικ. 1-14 αριστερά)
- Πιέστε προσεκτικά το κάλυμμα στο πάνελ (Ανατρέξτε στην Εικ. 1-14 δεξιά)

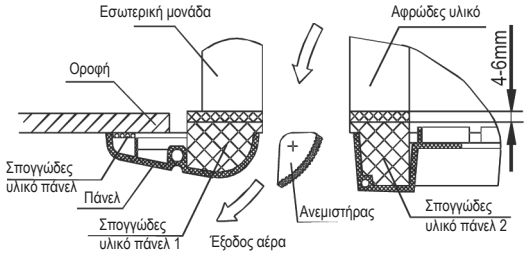

Εικ. 1-11

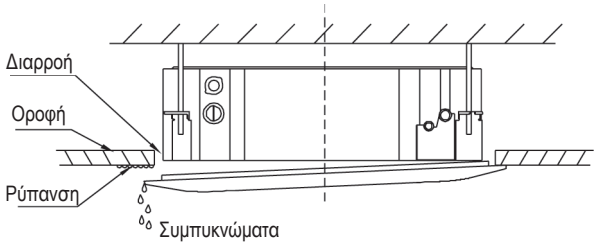

Εικ. 1-12

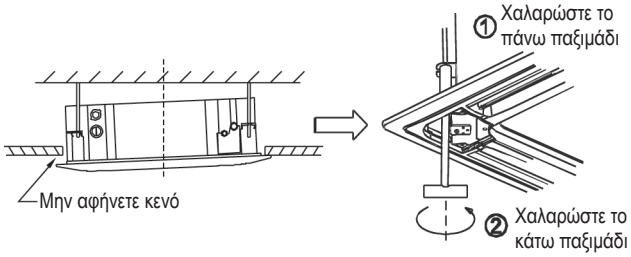

Εικ. 1-13

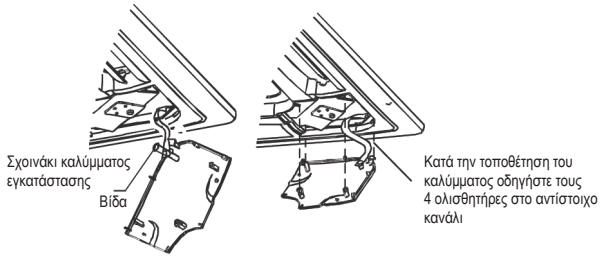

Εικ. 1-13

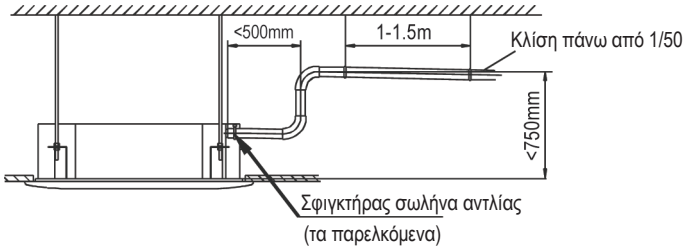

Εικ. 1-15

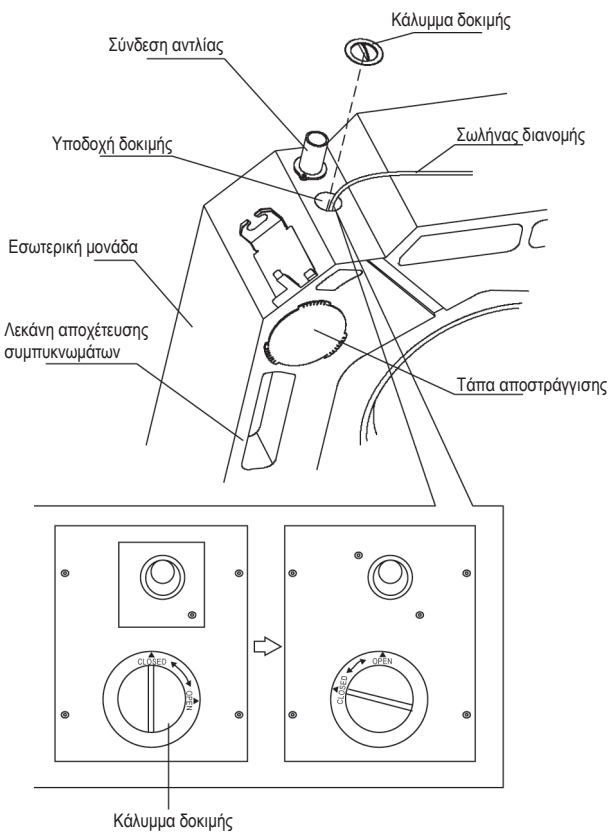

Εικ. 1-16

■ Δοκιμή αποστάγγισης

• Ελέγξτε πως ο αγωγός αποστράγγισης δεν είναι φραγμένος.
•Σε νεόκτιστα σπίτια αυτή η δοκιμή πρέπει να γίνει πριν κλείσει η οροφή

■ Μονάδα με αντλία

1 Αφαιρέστε το κάλυμμα και ρίξτε περίπου 2000ml νερό στην λεκάνη.

2 Λειτουργήστε τη μονάδα σε ψύξη. Θα πρέπει να ακουστεί ο ήχος της αντλίας συμπυκνωμάτων. Ελέγξτε εάν το νερό αποστραγγίζεται σωστά (είναι πιθανό 1 λεπτό καθυστέρησης ανάλογα με το μήκος του αγωγού αποστράγγισης). Ελέγξτε αν υπάρχει διαρροή από τις συνδέσεις.

3 Απενεργοποιήστε την κλιματιστική μονάδα και επανατοποθετήστε το κάλυμμα.

1.4 Εγκατάσταση αεραγωγών.

Ο κλιματισμένος αέρας μπορεί να διανεμηθεί στον χώρο μέσω αεραγωγού.

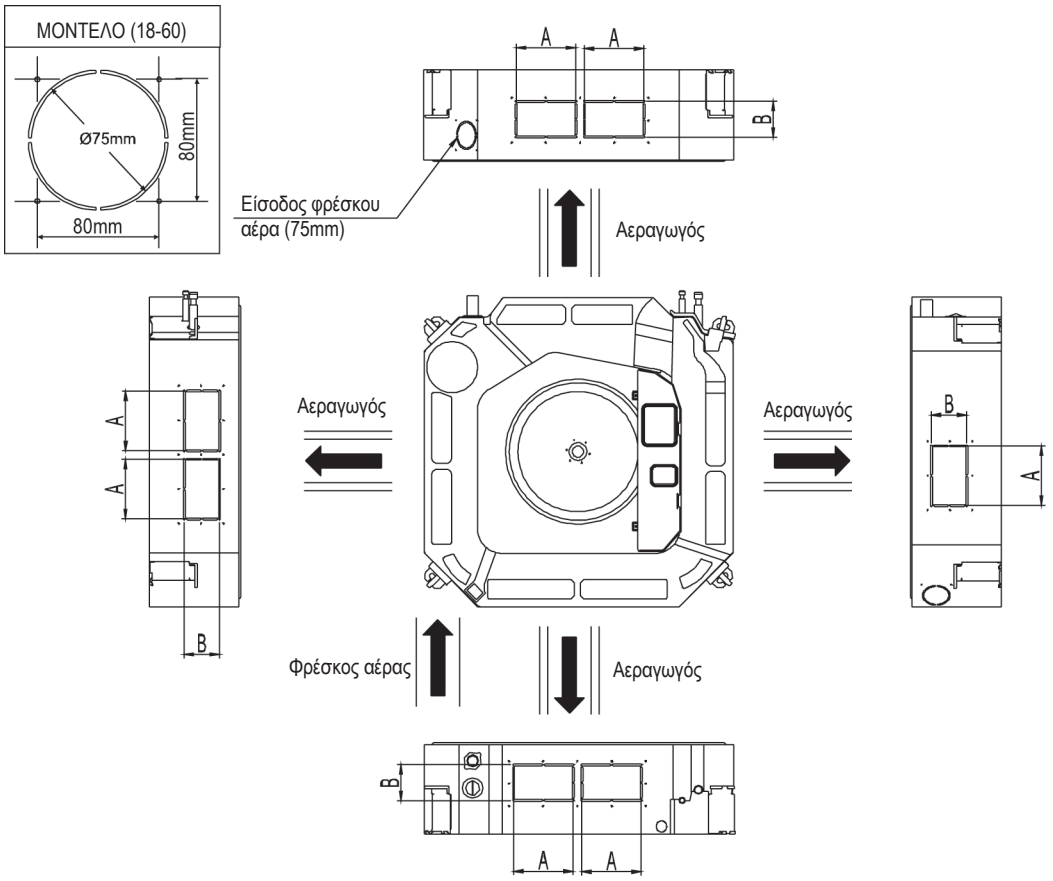

Εικ. 1-17

ΣΗΜΕΙΩΣΗ

Μοντέλο από 18 εως 30	Σειρά A=160mm; Σειρά B=75mm
Μοντέλο από 36 εως 60	Σειρά A=160mm; Σειρά B=95mm

Σύνδεση ενός αεραγωγού

Η παροχή αέρα στον αεραγωγό για τα μοντέλα 18 εώς 30 είναι 300-360 m^3/h

Η παροχή αέρα στον αεραγωγό για τα μοντέλα 36 εώς 60 είναι 400-640 m^3/h

Το μέγιστο μήκος του αεραγωγού είναι 2m.

Η αρχική έξοδος του αέρα που έχει την ίδια κατεύθυνση με αυτή που εξέρχεται από τον αεραγωγό θα πρέπει να σφραγιστεί, στην περίπτωση που συνδεθούν 2 αεραγωγοί.

Σύνδεση δύο αεραγωγών.

Η παροχή αέρα στον κάθε αεραγωγό για τα μοντέλα 18 εώς 30 είναι 200-260 m^3/h

Η παροχή αέρα στον κάθε αεραγωγό για τα μοντέλα 36 εώς 60 είναι 300-500 m^3/h

Το μέγιστο μήκος του κάθε αεραγωγού είναι 1,5m.

Η αρχική έξοδος του αέρα που έχει την ίδια κατεύθυνση με αυτή που εξέρχεται από τον αεραγωγό θα πρέπει να σφραγιστεί.

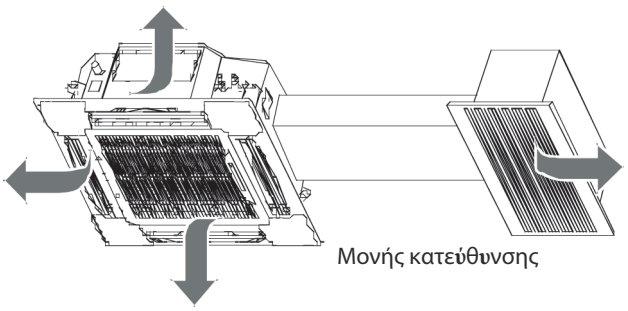

Εικ. 1-18

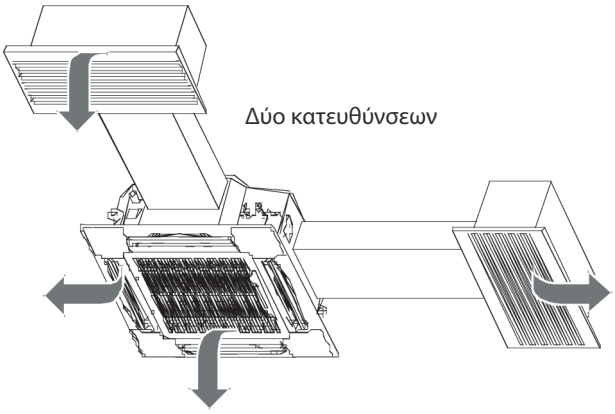

Εικ. 1-19

2. ΕΓΚΑΤΑΣΤΑΣΗ ΕΞΩΤΕΡΙΚΗΣ ΜΟΝΑΔΑΣ

2.1 Απαιτήσεις που αφορούν την επιλογή της θέσης εγκατάστασης

1. Επιλέξτε ένα μέρος συμπαγές και σταθερό ώστε να αντέχει το βάρος και τους κραδασμούς της μονάδας, όπου δεν θα αυξάνεται ο θόρυβος λειτουργίας.
2. Επιλέξτε ένα μέρος όπου ο ζεστός αέρας της κατάθλιψης μπορεί να απελευθερώνεται στο περιβάλλον και ο θόρυβος λειτουργίας να μην ενοχλεί τους γείτονες.
3. Αποφύγετε μέρη κοντά σε κρεβατοκάμαρα έτσι ώστε να μην ενοχλήστε από τον θόρυβο λειτουργίας.
4. Θα πρέπει να υπάρχει αρκετός ελεύθερος χώρος ώστε να μπορεί να μετακινηθεί η μονάδα αν χρειαστεί.
5. Θα πρέπει να υπάρχει επαρκής ελύθερος χώρος για την ροή του αέρα και δεν θα πρέπει να υπάρχουν εμπόδια κοντά στην είσοδο και έξοδο του άερα.
6. Δεν θα πρέπει να βρίσκεται κοντά σε μέρη στα οποία υπάρχει πιθανότητα διαρροής εύφλεκτων αερίων.
7. Οι μονάδες, τα παροχικά καλώδια και τα καλώδια εντολών θα πρέπει να εγκαθίστανται τουλάχιστον σε 3m απόσταση από τηλεοράσεις και ραδιόφωνα. (Μπορεί να ακούγονται ήχοι ακόμα και αν βρίσκονται σε απόσταση πάνω από 3m ανάλογα τα ραδιοκύμματα).
8. Σε παραθαλάσσιες περιοχές ή σε θειούχο περιβάλλον, η διάβρωση θα μικρύνει την διάρκεια ζωής της κλιματιστικής μονάδας.
9. Εφόσον η αποστράγγιση των συμπυκνωμάτων γίνεται από την εξωτερική μονάδα, μην τοποθετείτε από κάτω οτιδήποτε δεν θα πρέπει να έρθει σε επαφή με υγρασία.

ΣΗΜΕΙΩΣΗ: Δεν μπορεί να εγκατασταθεί αναρτώμενη από οροφή

ΠΡΟΣΟΧΗ

Όταν η κλιματσιτική μονάδα λειτουργεί σε χαμηλές εξωτερικές θερμοκρασίες, ακολουθήστε τις παρακάτω οδηγίες:

• Για την αποφυγή έκθεσης σε δυνατό άνεμο, εγκαταστήστε την εξωτερική μονάδα με την πλευρά αναρρόφησης αντικριστά στο τοίχο.
• Μην τοποθετείτε την εξωτερική μονάδα σε μέρος όπου η πλευρά αναρρόφησης θα είναι εκτεθειμένη σε δυνατό άνεμο.
• Για την αποφυγή έκθεσης σε άνεμο, προτείνεται η τοποθέτηση ελάσματος απορρόφησης συντονισμού στην πλευρά της κατάθλιψης της εξωτερικής μονάδας.
• Σε περιοχές όπου υπάρχει χιονόπτωση, επιλέξτε ένα μέρος εγκατάστασης όπου το χιόνι δεν θα επηρεάζει την μονάδα.

2.2 Απεικόνιση μεγέθους της μονάδας

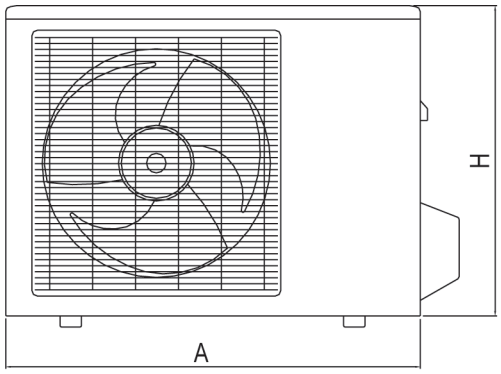

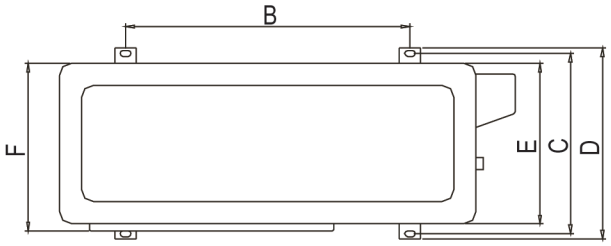

Μονάδα μέτρησης:mm

ΜΟΝΤΕΛΟ (Btu/h)	A	B	C	D	E	F	H
12K/18K	810	549	325	350	305	310	558
24K	845	560	335	360	312	320	700
30K/36K/42K	945	640	405	448	385	395	810
48K/55K	938	634	404	448	368	392	1369

2.3 Οδηγίες εγκατάστασης

- Σε περίπτωση που παρεμποδίζεται η ροή εισερχόμενου ή εξερχόμενου αέρα από την εξωτερική μονάδα, ακολουθήστε τις παρακάτω οδηγίες.
- Για τους παρακάτω τύπους εγκατάστασης, το ύψος του τοίχου στην πλευρά εξόδου θα πρέπει να είναι το μέγιστο 1200mm.

Τοίχος σε 1 πλευρά

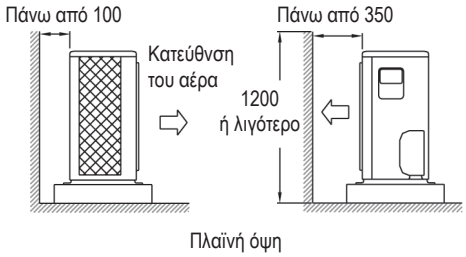

Τοίχοι σε 2 πλευρές

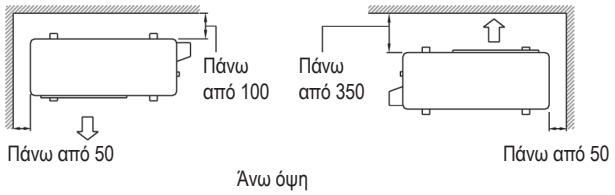

Τοίχοι σε 3 πλευρές

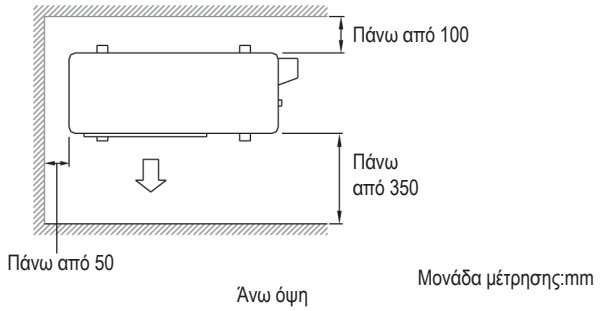

2.4 Εγκατάσταση εξωτερικής μονάδας

1) Εγκατάσταση εξωτερικής μονάδας

- Κατά την εγκατάσταση της εξωτερικής μονάδας ανατρέξτε στο εδάφιο "απαιτήσεις για την επιλογή θέσης".
- Ελέγξτε την σταθερότητα και οριζοντιότητα του εδάφους, έτσι ώστε να μην προκαλούνται κραδασμοί και θόρυβος κατά την λειτουργία.
- Στερεώστε την μονάδα με μπουλόνια στήριξης (Μπορείτε να προμηθευτείτε από την τοπική αγορά 4 σετ από M8 ή M10 βίδες, παξιμάδια και ροδέλες).

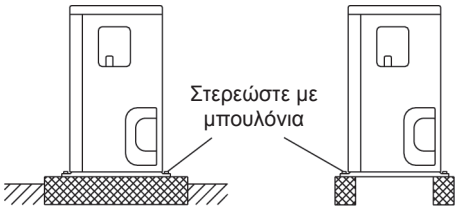

2) Αποστράγγιση

- Εάν απαιτείται αγωγός αποστράγγισης, ακολουθήστε τα παρακάτω.
- Χρησιμοποιήστε τάπα αποστράγγισης.
- Αν η θύρα αποστράγγισης καλύπτεται από βάση στήριξης ή το έδαφος, τοποθετήστε επιπλέον βάσεις στα πόδια τουλάχιστον 30mm.
- Σε περιοχές με πολύ κρύο μην χρησιμοποιείτε αγωγό αποστράγγισης στην εξωτερική μονάδα. (Μπορεί να παγώσουν τα συμπυκνώματα, επηρεάζοντας την θερμική απόδοση της μονάδας)

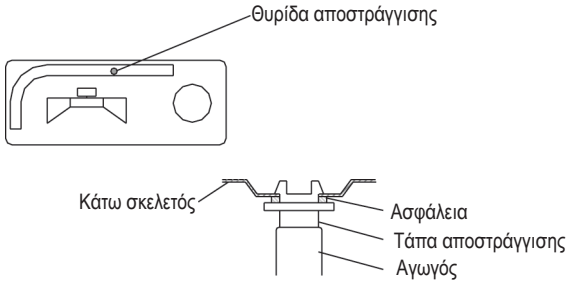

3 ΕΓΚΑΤΑΣΤΑΣΗ ΤΩΝ ΨΥΚΤΙΚΩΝ ΣΩΛΗΝΩΣΕΩΝ

⚠ Όλη η εγκατάσταση των σωληνώσεων πρέπει να γίνει από αδειούχο ψυκτικό και πρέπει να συμμορφώνεται με του κανονισμούς.

Προφυλάξεις

- Θα πρέπει να γίνει θερμική μόνωση και στην γραμμή αερίου και στην γραμμή υγρού. (Σε μονάδες ψύξης-θέρμανσης, η θερμοκρασία της γραμμής αερίου μπορεί να φτάσει περίπου 120°C. Χρησιμοποιήστε επαρκούς αντίστασης μόνωση).
- Επιπλέον, σε περιπτώσεις που η θερμοκρασία και η υγρασία στα μέρη των ψυκτικών σωληνώσεων μπορεί να ξεπεράσει τους 30ºC ή Rh80%, ενισχύστε την μόνωση (από 20mm και πάνω).
  Μπορεί να εμφανιστούν συμπυκνώματα στην επιφάνεια του μονωτικού υλικού.
- Πριν προμηθευτείτε τις σωληνώσεις, ελέγξτε τι ψυκτικό υγρό χρησιμοποιείται.
- Χρησιμοποιήστε κατάλληλο κόφτη και εκχειλωτικά σύμφωνα με το ψυκτικό υγρό.
- Χρησιμοποιήστε υλικά από μαλακό μέταλλο για την σύνδεση των εκχειλώσεων.
- Μην αναμειγνύετε κάποιο άλλο υλικό με το ψυκτικό υγρό στο ψυκτικό κύκλωμα.
- Αν κατά τις εργασίες προκληθεί διαρροή ψυκτικού αερίου αερίστε αμέσως τον χώρο. Όταν το ψυκτικό αέριο έρχεται σε επαφή με φλόγα παράγεται τοξικό αέριο.
- Βεβαιωθείτε πως δεν υπάρχει διαρροή ψυκτικού αερίου. Αν το ψυκτικό αέριο έρθει σε επαφή με φλόγα τότε θα παραχθεί τοξικό αέριο.
- Ανατρέξτε στον παρακάτω πίνακα για τις διαστάσεις των εκχειλωτικών και την κατάλληλη ροπή σύσφιξης. (Υπερβολική σύσφιξη μπορεί να φθείρει την εκχείλωση και να προκληθούν διαρροές).

Διατομή σωλήνα(mm)	Ροπή σύσφιξης	Διάσταση εκχείλωσης A(mm)	Σχήμα εκχείλωσης
Ø6.35	15~16 N. m (153~163 kgf.cm)	8.3~8.7	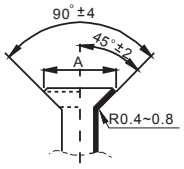
Ø9.52	25~26 N. m (255~265 kgf.cm)	12.0~12.4	
Ø12.7	35~36 N. m (357~367 kgf.cm)	15.4~15.8	
Ø15.9	45~47 N. m (459~480 kgf.cm)	18.6~19.0	

- Ελέγξτε ότι η διαφορά ύψους μεταξύ εσωτερικής και εξωτερικής μονάδας και το μήκος της σωλήνωσης ανταποκρίνεται στα παρακάτω:

Τύπος Μοντέλου	Απόδοση (Btu/h)	Μέγιστο επιτρεπτό μήκος σωλήνας	Μέγιστο επιτρεπτό ύψος σωλήνας
Κλιματιστικό διαιρούμενου τύπου, R410 INVERTER	<15000	25m	10m
	≥15000~<24000	30m	20m
	≥24000~<36000	50m	25m
	≥36000~<60000	65m	30m

3.1 Εκχείλωση

1) Κόψτε τον σωλήνα με ειδικό κοπτικό εργαλείο.
2) Απομακρύνετε τα γρέζια έχοντας την επιφάνεια που έχει κοπεί προς τα κάτω ώστε να μην εισέλθουν ρινίσματα στον σωλήνα.

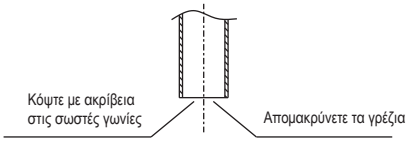

3) Τοποθετήστε το εκχειλωτικό στον σωλήνα
4) Εκχειλώστε των σωλήνα

Εξωτερική διάμετρος (mm)	A(mm)	
	Μεγ.	Ελαχ.
Ø6.35	1.3	0.7
Ø9.52	1.6	1.0
Ø12.7	1.8	1.0
Ø15.9	2.2	2.0

Τοποθετήστε στην θέση που υποδεικνύεται παρακάτω

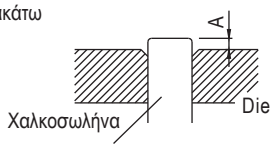

5) Βεβαιωθείτε πως η εκχείλωση έχει γίνει σωστά

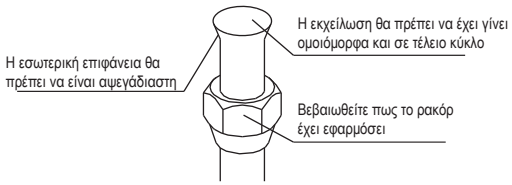

3.2 Ψυκτικές σωληνώσεις

- Όταν συνδέετε το ρακόρ, καλύψτε με λιπαντικό λάδι και την εσωτερική και την εξωτερική πλευρά.

Επαλλείψτε σε αυτό το σημείο με λάδι αιθέρα ή εστέρα

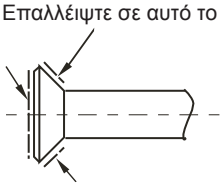

- Ευθυγραμμίστε τα κέντρα και έπειτα σφίξτε τα ρακόρ χειροκίνητα 3 με 4 φορές. Έπειτα με την χρήση ροπόκλειδων σφίξτε τα πλήρως.

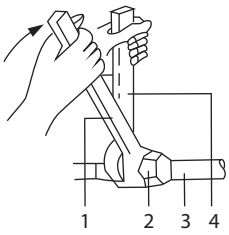

1 Ροπόκλειδο
2 Ρακόρ
3 Σώμα σωλήνα
4 Γαλλικό κλειδί

3.3 Απομάκρυνση του αέρα και έλεγχος για διαρροές

- Όταν ολοκληρωθούν οι εργασίες τοποθέτησης των σωληνώσεων, είναι απαραίτητο να απομακρυνθεί ο αέρας και να γίνει έλεγχος για διαρροές.

ΠΡΟΕΙΔΟΠΟΙΗΣΗ

- Στο ψυκτικό κύκλωμα δεν πρέπει να κυκλοφορεί μόνο το προδιαγεγραμμένο ψυκτικό υγρό.
- Αν ανιχνευτεί διαρροή ψυκτικού αερίου, θα πρέπει να αεριστεί ο χώρος άμεσα.
- Το ψυκτικό μέσο θα πρέπει πάντα να ανακυκλώνεται και να μην απελευθερώνεται στο περιβάλλον.
- Θα πρέπει ανάλογα το ψυκτικό μέσο να επιλέγεται και η αντίστοιχη αντλία κενού. Αν χρησιμοποιείτε την ίδια αντλία κενού για διάφορους τύπους ψυκτικών μέσων υπάρχει κίνδυνος φθοράς της ίδιας της αντλίας ή της κλιματιστικής μονάδας.

- Στην περίπτωση που χρειαστεί πλήρωση ψυκτικού μέσου, θα πρέπει πρώτα να γίνει κενό στις ψυκτικές σωλήνώσεις και στην εσωτερική μονάδα.
- Για τον χειρισμό του στελέχους της αντεπίστροφης βαλβίδας χρησιμοποιήστε ένα εξαγωνικό γαλλικό κλειδί.
- Οι ενώσεις των ψυκτικών σωληνώσεων θα πρέπει να συσφίγκονται με ροπόκλειδο με την καθορισμένη ροπή σύσφιξης.

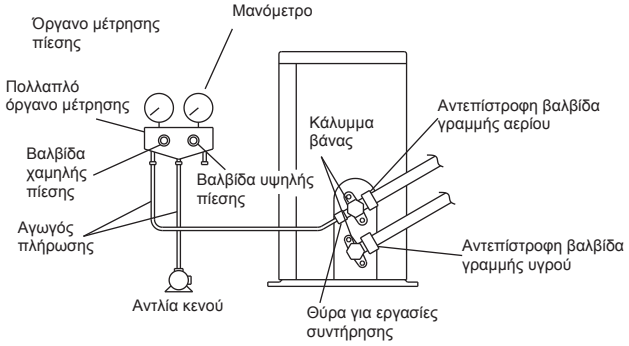

1. Συνδέστε την μια πλευρά του αγωγού πλήρωσης με την θύρα της αντεπίστροφης βαλβίδας.

2. Ανοίξτε τελείως την βαλβίδα χαμηλής πίεσης του μανομέτρου (Lo) και κλείστε την βαλβίδα υψηλής πίεσης (Hi) (Η βαλβίδα υψηλής πίεσης συνήθως δεν χρησιμοποιείται).

3. Κάντε κενό και βεβαιωθείτε πως η ένδειξη στο όργανο μέτρησης πίεσης είναι -0.1MPa (-76cmHg).*1

4. Κλείστε την βαλβίδα χαμηλής πίεσης (Lo) και σταματήστε την αντλία κενού. (Περιμένετε λίγα λεπτά έτσι ώστε να βεβαιωθείτε πως η ένδειξη δεν θα αλλάξει)*2

5. Αφαιρέστε τα καλύμματα από την αντεπίστροφη υγρού και αερίου.

6. Στρέψτε αριστερόστροφα κατά 90 μοίρες το στέλεχος της αντεπίστροφης υγρού με ένα εξαγωνικό γαλλικό κλειδί, ώστε να ανοίξει η βαλβίδα. Κλείστε την μετά από 5 δευτερόλεπτα και ελέγξτε για διαρροές.
Με την χρήση σαπουνοδιαλύματος ελέγξτε για διαρροές στα ρακόρ της εσωτερικής και εξωτερικής μονάδας, καθώς καθώς και στις βάνες. Μόλις ολοκληρωθεί ο έλεγχος σκουπίστε το σαπουνοδιάλυμα.

7. Αποσυνδέστε τον αγωγό πλήρωσης από την θύρα της αντεπίστροφης αερίου και ανοίξτε τις βάνες υγρού και αερίου.

8. Σφίξτε τα καλύμματα σε όλες τις βάνες με ροπόκλειδο σύμφωνα με τις οριζόμενες ροπές

*1. Μήκος σωληνώσεων κατά ώρα λειτουργίας αντλίας κενού.

Μήκος σωληνώσεων	Ως 15m	Πάνω από 15m
Ώρα λειτουργίας	Τουλάχιστον 10 λεπτά	Τουλάχιστον 15 λεπτά

*2 Εάν η ένδειξη μεταβληθεί μπορεί το ψυκτικό υγρό να περιέχει νερό ή κάποια σύνδεση είναι χαλαρή. Ελέγξτε όλες τις συνδέσεις, συσφίξτε τα ρακόρ όπου απαιτείται και επαναλάβετε τα βήματα 2 ως 4.

3.4 Επιπλέον πλήρωση ψυκτικού υγρού

ΠΡΟΣΟΧΗ

- Πλήρωση ψυκτικού υγρού μπορεί να γίνει αφού έχει ολοκληρωθεί ο έλεγχος διαρροών και η διαδικασία κενού.
- Ελέγξτε τον τύπο ψυκτικού υγρού που αναγράφεται στην πινακίδα της μονάδας. Πλήρωση με ακατάλληλο ψυκτικό μέσο μπορεί να προκαλέσει εκρήξεις και ατυχήματα.
- Τα δοχεία ψυκτικών υγρών θα πρέπει να ανοίγονται αργά.

- Η εξωτερική μονάδα είναι εργοστασιακά πληρωμένη με ψυκτικό υγρό. Υπολογίστε την ποσότητα επιπλέον πλήρωσης ψυκτικού υγρού σύμφωνα με τη διάμετρο και το μήκος του σωλήνα σύνδεσης εσωτερικής με εξωτερική μονάδα της γραμμής υγρού.

Μήκος σωληνώσεων και ποσότητα ψυκτικού υγρού:

Μήκος σωληνώσεων	Μέθοδος κενού	Επιπλέον ποσότητα πλήρωσης ψυκτικού υγρού	
Μικρότερο από 5m	Χρήση αντλίας κενού	————	
Πάνω από 5m	Χρήση αντλίας κενού	Χρήση αγτλίας κενού : Φ6.35mm R410A: (L-5)x15g/m	Γραμμή υγρού: Φ9.52mm R410A: (L-5)x30g/m

- Βεβαιωθείτε πως έχετε συμπληρώσει την απαιτούμενη ποσότητα ψυκτικού υγρού. Σε αντίθετη περίπτωση υπάρχει πιθανότητα μειωμένης απόδοσης.

3.5 Σύνδεση ψυκτικών σωληνώσεων

1) Προσοχή στον χειρισμό των σωληνώσεων

- Τα άκρα των σωληνώσεων θα πρέπει να είναι προστατευμένα από σκόνη και υγρασία
- Όλες οι καμπύλες θα πρέπει να είναι όσο το δυνατό πιο ομαλές. Χρησιμοποιήστε το κατάλληλο εργαλείο για κάμψη σωληνώσεων.

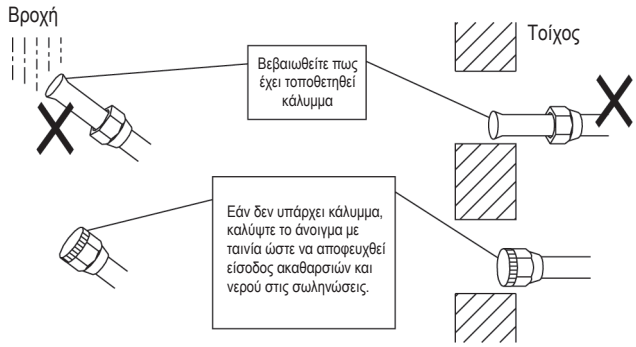

2) Μονώστε τις σωληνώσεις υγρού και αερίου. Χρησιμοποιήστε διαφορετικές θερμικές μονώσεις για τις σωληνώσεις υγρού και αερίου αντίστοιχα. Δείτε την παρακάτω εικόνα.

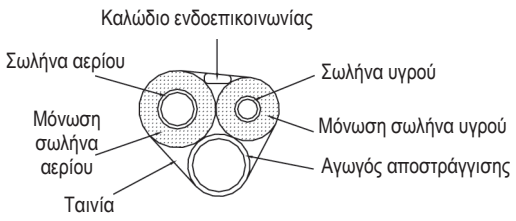

Διαδικασία μόνωσης σωληνώσεων

Γραμμή αερίου

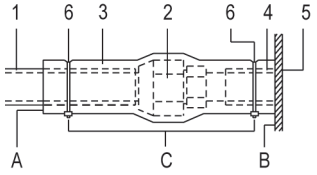

Γραμμή υγρού

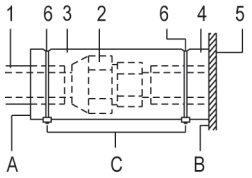

1 Υλικό μόνωσης σωληνώσεων
2 Σύνδεση
3 Μόνωση για τις συναρμογές
4 Υλικό μόνωσης σωληνώσεων
5 Εσωτερική μονάδα
6 Σφιγκτήρας
A Στρέψτε την ραφή προς τα πάνω
B Προσαρμόστε στην βάση
Γ Σφίξτε τα δεματικά (σφιγκτήρες)

- Βεβαιωθείτε πως οι σωληνώσεις είναι μονωμένες καθ'όλο το μήκος τους. Εκτεθειμένες σωληνώσεις μπορεί να προκαλέσουν εμφάνιση συμπυκνωμάτων ή εγκαύματα όταν τις ακουμπήσετε.
- Βεβαιωθείτε πως δεν υπάρχουν υπολείματα λαδιού στα πλαστικά μέρη. Μπορεί να προκληθεί παραμόρφωση και φθορά των πλαστικών επιμέρους.

4 ΣΥΝΔΕΣΗ ΤΟΥ ΑΓΩΓΟΥ ΑΠΟΣΤΡΑΓΓΙΣΗΣ

4.1 Σύνδεση των αγωγών αποστράγγισης

• Βεβαιωθείτε πως ο αγωγός είναι όσο το δυνατό πιο κοντός και με κλίση καθοδική τουλάχιστον 1/100, ώστε να μην υπάρξει παγιδευμένος αέρας εντός του αγωγού.
• Το μέγεθος του αγωγού θα πρέπει να είναι ίσο ή μεγαλύτερο με αυτό των ψυκτικών σωληνώσεων (αγωγός από PVC, ονομαστική εσωτερική διάμετρος 20mm, εξωτερική διάμετρος 25mm).
• Τοποθετήστε τον αγωγό αποστράγγισης στην υποδοχή και σφίξτε με μεταλλικό σφιγκτήρα.

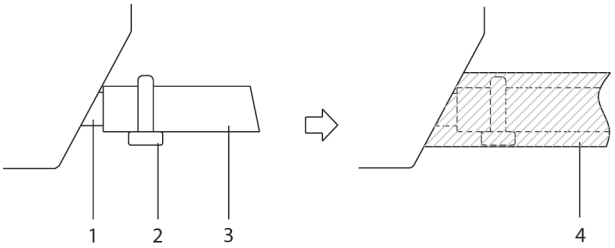

1 Υποδοχή αποστράγγισης
2 Μεταλλικός σφιγκτήρας
3 Αγωγός αποστράγγισης
4 Μόνωση

• Μονώστε τον αγωγό αποστράγγισης εντός του κτιρίου.
• Αν ο αγωγός αποστράγγισης δεν μπορεί να είναι επαρκώς επικλινής, εφαρμόστε στον αγωγό διάταξη ανύψωσης.
• Βεβαιωθείτε πως έχουν θερμομονωθεί τα παρακάτω 2 σημεία, για την αποφυγή διαρροής νερού εξαιτίας συμπυκνώσεων.
1 Αγωγός αποστράγγισης (εσωτερικά)
2 Υποδοχή αποστράγγισης

5 ΣΥΝΔΕΣΜΟΛΟΓΙΑ

Γενικές οδηγίες

- Όλες οι καλωδιώσεις και παρελκόμενα πρέπει να τοποθετηθούν από αδειούχο ηλεκτρολόγο και σύμφωνα με τους Ευρωπαϊκούς και εθνικούς κανονισμούς.
- Χρησιμοποιήστε μόνο καλώδιο από χαλκό.
- Για την συνδεσμολογία της εσωτερικής μονάδας, εξωτερικής μονάδας και χειριστηρίου, ακολουθήστε το ηλεκτρολογικό διάγραμμα που βρίσκεται πάνω στην μονάδα.
- Στο κύκλωμα θα πρέπει να τοποθετηθεί ασφαλειοδιακόπτης .
- Να σημειωθεί πως σε περίπτωση διακοπής ρεύματος η μονάδα θα επανεκκινηθεί αυτόματα.
- Βεβαιωθείτε πως η κλιματιστική μονάδα έχει γειωθεί.
- Μην συνδεέτε το καλώδιο γείωσης σε σωληνώσεις αερίου, νερού, καλώδια φωτισμού ή τηλεφωνικά καλώδια.
  - Σωλήνες αερίου: Μπορεί να προκληθεί έκρηξη ή πυρκαγιά.
  - Σωλήνες νερού: Αν η κατασκευή τους είναι από σκληρό βινύλιο δεν θα υπάρχει γείωση.
  - Τηλεφωνικά ή καλώδια φωτισμού: Σε περίπτωση καταιγίδας μπορεί να προκαλέσει μη ομαλό υψηλό ηλεκτρικό δυναμικό

Ελάχιστη διατομή καλωδίων:

Ονομαστική τάση λειτουργίας (A)	Ονομαστική διατομή καλωδίων (mm^2)
≤6	0.75
>6 and ≤10	1.0
>10 and ≤16	1.5
>16 and ≤25	2.5
>25 and ≤32	4.0
>32 and ≤45	6.0
>45 and ≤60	10.0

ΣΗΜΕΙΩΣΗ:
Η διατομή του καλωδίου καθώς και η επιλογή της ασφάλειας ή του διακόπτη καθορίζονται από το μέγιστο ρεύμα λειτουργίας της μονάδας, το οποίο αναγράφεται σε αντίστοιχη πινακίδα στο πλαϊνό πάνελ της μονάδας. Πριν την επιλογή καλωδίου, ασφάλειας ή διακόπτη ανατρέξτε στην πινακίδα.

Ηλεκτρολογικά χαρακτηριστικά

ΜΟΝΤΕΛΟ (Btu/h)		18K	24K	30K~36K	42K~48K	55K	36K	42K~55K
Ρεύμα (εσωτερική μονάδα)	ΦΑΣΕΙΣ	1 Φάση	1 Φάση	1 Φάση	1 Φάση	1 Φάση	1 Φάση	1 Φάση
	ΤΑΣΗ	220-240V	220-240V	220-240V	220-240V	220-240V	220-240V	220-240V
ΡΕΛΕ/ΑΣΦΑΛΕΙΑ (A)		15/10	15/10	15/10	15/10	15/10	15/10	15/10
Ρεύμα (εξωτερική μονάδα)	ΦΑΣΕΙΣ	1 Φάση	1 Φάση	1 Φάση	1 Φάση	1 Φάση	3 Φάσεις	3 Φάσεις
	ΤΑΣΗ	220-240V	220-240V	220-240V	220-240V	220-240V	380-415V	380-415V
ΡΕΛΕ/ΑΣΦΑΛΕΙΑ (A)		30/20	30/20	40/30	40/35	50/40	30/20	30/20

Συνδεσμολογία

- Αφαιρέσετε το καπάκι από το προστατευτικό πλαίσιο που βρίσκονται οι πλακέτες της εσωτερικής μονάδας. Αφαιρέστε το κάλυμμα της εξωτερικής μονάδας.
- Ακολουθήστε το ηλεκτρολογικό διάγραμμα που βρίσκεται στο καπάκι του πλαισίου της εσωτερικής μονάδας, ώστε να συνδέσετε την εξωτερική μονάδα, την εσωτερική μονάδα και το χειριστήριο. Στερεώστε τα καλώδια με σφιγκτήρα.
- Επανατοποθετήστε το κάλυμμα της εξωτερικής μονάδας.

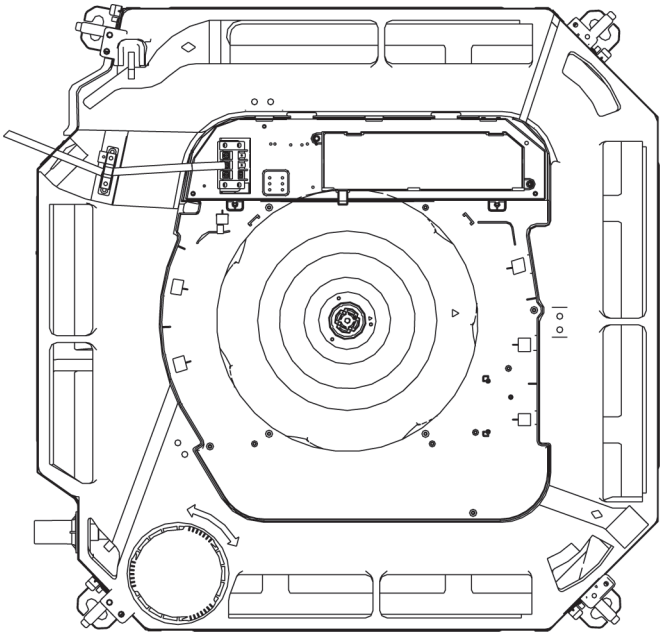

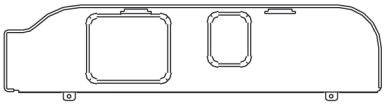

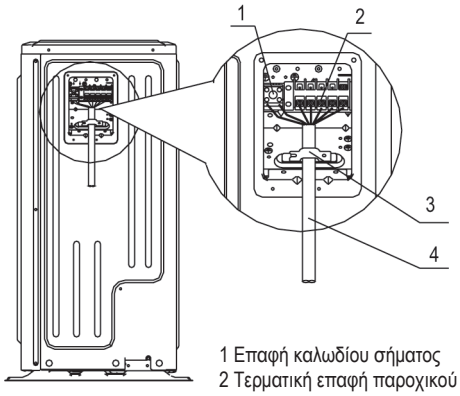

1 Επαφή καλωδίου σήματος
2 Τερματική επαφή παροχικού καλωδίου
3 Σφιγκτήρας καλωδίων
4 Καλώδιο επικοινωνίας

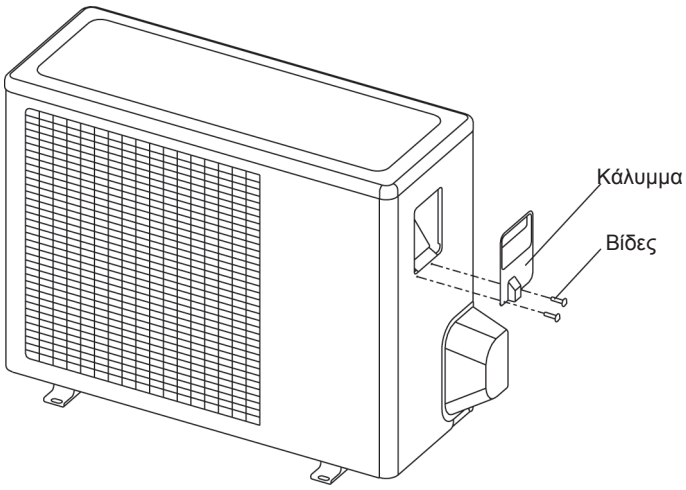

Προφυλάξεις

1 Λάβετε υπόψη τα παρακάτω κατά την σύνδεση της παροχής ρεύματος.

• Μην συνδέετε καλώδια διαφορετικής διατομής στην ίδια επαφή. (Χαλάρωση της σύνδεσης μπορεί να προκαλέσει υπερθέρμανση)

• Η συνδεμολογία καλωδίων ίδιας διατομής πρέπει να γίνει όπως φαίνεται παρακάτω.

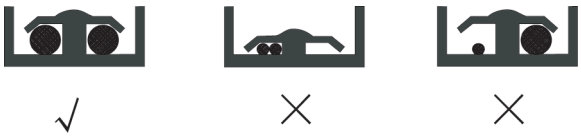

• Χρησιμοποιήστε το προδιαγραμένο καλώδιο. Συνδέστε το ασφαλώς στην τερματική επαφή. Σφίξτε το καλώδιο στην επαφή χωρίς να εφαρμόζετε πολύ δύναμη (Ροπή σύσφιξης:1.31N.m±10%).

• Κατά την επανατοποθέτηση του καλύμματος του πλαισίου, βεβαιωθείτε πως δεν τραυματίστηκε κάποιο καλώδιο.

• Αφού ολοκληρωθούν οι εργασίες σύνδεσης των καλωδίων καλύψτε τυχόν κενά που έχουν δημιουργηθεί στις οπές για την διέλευση των καλωδίων, για την αποφυγή βραχυκλυκλωμάτων προερχόμενα από την εισόδο εντόμων ή ακαθαρσιών στην μονάδα.

2 Μην συνδέετε καλώδια διαφορετικών διατομών στην ίδια τερματική επαφή γείωσης. Χαλαρή σύνδεση μπορεί φθείρει την προστασία.

3 Χρησιμοποιήστε μόνο προδιαγεγραμμένα καλώδια και συνδέστε σφιχτά στις τερματικές επαφές. Βεβαιωθείτε ότι δεν εφαρμόζεται υπερβολική πίεση στις τερματικές επαφές. Βεβαιωθείτε πως τα καλώδια βρίσκονται σε τακτική σειρά, έτσι ώστε να μην εμποδίζουν άλλα παρελκόμενα, όπως να μην κλείνει το κάλυμα του πλαισίου. Βεβαιωθείτε πως το κάλυμα κλείνει σωστά. Ατελείς συνδέσεις μπορεί να προκαλέσουν υπερθέρμανση και στην χειρότερη περίπτωση ηλεκτροπληξία ή πυρκαγιά.

6 Ψυκτικές σωληνώσεις (μονάδα με ζεύγος διδύμων εσωτερικών)

6.1 Μέγιστο μήκος και υψομετρική διαφορά ψυκτικών σωληνώσεων.

Σημείωση: Το μήκος του διακλαδωτή είναι μειωμένο κατά 0,5m από το ισοδύναμο μήκος του σωλήνα.

		Μέγιστη τιμή		Σωληνώσεις
Μήκος σωληνώσεων	Συνολικό μήκος σωληνώσεων (Πραγματικό)	18K+18K	30m	L+L1+L2
		24K+24K/ 30K+30K	50m	
	Μέγιστη απόσταση από την διακλάδωση των σωληνώσεων	15m		L1;L2
	Μέγιστη απόσταση από την διακλάδωση των σωληνώσεων	10m		L1-L2
Διαφορά ύψους	Υψομετρική διαφορά εσωτερικής με εξωτερική μονάδα	20m		H1
	Υψομετρική διαφορά εσωτερικής με εξωτερική μονάδα	0.5m		H2

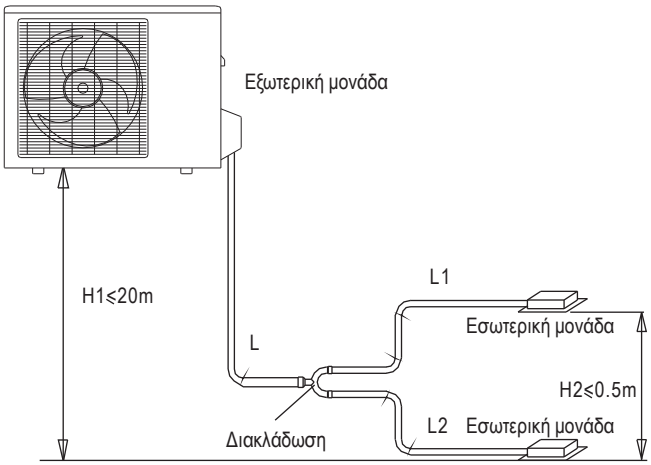

Σημείωση:
Όλες οι διακλαδώσεις πρέπει να έχουν παραχθεί από τον κατασκευαστή, διότι σε αντίθετη περίπτωση μπορεί να προκληθεί δυσλειτουργία. Οι εσωτερικές μονάδες πρέπει να τοποθετηθούν ισοδύναμα και στις 2 πλευρές της διακλάδωσης τύπου U.

Η διακλάδωση θα πρέπει να τοποθετηθεί οριζόντια. Η απόκλιση δεν θα πρέπει να ξεπερνάει τις 10 μοίρες. Σε αντίθετη περίπτωση μπορεί να προκληθεί δυσλειτουργία.

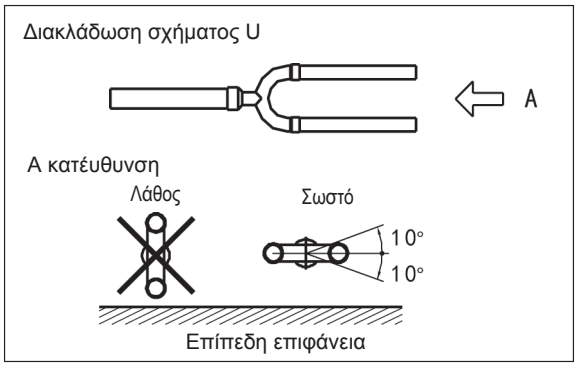

6.2 Πόσότητα πλήρωσης ψυκτικού μέσου

Η ποσότητα πλήρωσης υπολογίζεται ανάλογα με την διάμετρο και το μήκος σωληνώσεων της γραμμής υγρού της εξωτερικής και εσωτερικής μονάδας. Το ψυκτικό μέσο είναι R410A

Διατομή σωληνώσεων γραμμής υγρού	Ποσότητα πλήρωσης ψυκτικού υγρού ανά μέτρο
Ø6.35	0.015kg
Ø9.5	0.030kg

7 ΔΟΚΙΜΑΣΤΙΚΗ ΛΕΙΤΟΥΡΓΙΑ

Βεβαιωθείτε πως τα προστατευτικά πλαίσια είναι κλειστά και στην εσωτερική και στην εξωτερική μονάδα.

Ανατρέξτε στο εδάφιο που αφορά τι πρέπει να προσέξετε κατά την εγκατάσταση και τι να ελέγξετε όταν ολοκληρωθούν οι εργασίες.

Αφού ολοκληρωθούν οι εργασίες εγκατάστασης ψυκτικών σωληνώσεων, αγωγού αποστράγγισης και ηλεκτρικής συνδεσμολογίας, θα πρέπει να διεξαχθεί δοκιμαστική λειτουργία.

Δοκιμαστική λειτουργία μετά την τοποθέτηση του πάνελ

1 Ανοίξτε την αντεπίστροφη βαλβίδα της γραμμής υγρού.
2 Ανοίξτε την αντεπίστροφη βαλβίδα της γραμμής υγρού.
3 Ηλεκτροδοτήστε την αντίσταση του ελαιολεκάνη για 6 ώρες.
4 Ορίστε την λειτουργία σε ψύξη από το ασύρματο τηλέχειριστήριο και πιέστε το πλήκτρο ON/OFF ώστε να ξεκινήσει η λειτουργία.
5 Ελέγξτε τα παρακάτω. Εάν παρουσιαστεί κάποια δυσλειτουργία ανατρέξτε το κεφάλαιο "Αντιμετώπιση προβλημάτων" στο εγχειρίδιο χρήστη, ώστε να επιλύσετε το πρόβλημα.

■ Η εσωτερική μονάδα
- Ελέγξτε αν ο διακόπτης στο ασύρματο τηλεχειριστήριο λειτουργεί σωστά.
- Ελέγξτε αν τα πλήκτρα στο ασύρματο τηλεχειριστήριο λειτουργούν σωστά.
- Ελέγξτε αν οι περσίδες κινούνται ομαλά.
- Ελέγξτε αν η θερμοκρασία έχει ρυθμιστεί σωστά.
- Ελέγξτε αν οι ενδυκτικές λυχνίες ανάβουν.
- Ελέγξτε αν τα πλήκτρα προσωρινής λειτουργίας λειτουργούν.
- Ελέγξτε αν η απορροή συμπυκνωμάτων γίνεται ομαλά.
- Ελέγξτε για κραδασμούς ή περίεργους θορύβους κατά τη λειτουργία.

■ Η εξωτερική μονάδα
- Ελέγξτε για κραδασμούς ή περίεργους θορύβους κατά τη λειτουργία.
- Ελέγξτε αν ο θόρυβος, ο αέρας ή τα συμπυκνώματα που παράγονται από την κλιματιστική μονάδα ενοχλούν τους γείτονες.
- Ελέγξτε για διαρροή ψυκτικού υγρού.

6 Μετά την λειτουργία απεργοποιήστε την μονάδα

Σε περίπτωση επανεκκίνησης της μονάδας μια προστατευτική διάταξη δεν επιτρέπει στην μονάδα να λειτουργήσει για 3 λεπτά.

* Ο σχεδιασμός και τα χαρακτηριστικά μπορεί να αλλάξουν χωρίς προειδοποίηση για τη βελτίωση του προϊόντος. Για λεπτομέρειες απευθυνθείτε στον προμηθευτή σας ή τον κατασκευαστή.

- Dacă se utilizează ca parte a unor unități multiple, vă rugăm consultați manualul de instalare și funcționare ce se poate găsi în pachetul unității exterioare.

CUPRINS PAGINĂ

PRECAUȚII 1
INFORMAȚII PRIVIND INSTALAREA 4
ACCESORII 5
INSTALAREA UNITĂȚII INTERIOARE 6
INSTALAREA UNITĂȚII EXTERIOARE 15
INSTALAREA CONDUCTEI DE AGENT FRIGORIFIC 19
LEGAREA CONDUCTEI DE SCURGERE 25
LUCRĂRI DE CABLARE ELECTRICĂ 25
FUNCȚIILE UNITĂȚILOR DUBLE 28
TESTAREA FUNCȚIONĂRII 30

PRECAUȚII

- Păstrați acest manual acolo unde operatorul îl poate găsi cu ușurință.
- Citiți cu atenție acest manual înainte de a porni aparatul.
- Din motive de siguranță, operatorul trebuie să citească următoarele precauții cu atenție.

Precauțiile pentru siguranță enumerate mai jos sunt împărțite în două categorii.

AVERTIZARE

Dacă nu urmați cu exactitate aceste instrucțiuni, aparatul poate cauza daune materiale, posibile vătămări sau decese.

ATENȚIE

Dacă nu urmați cu exactitate aceste instrucțiuni, aparatul poate cauza daune materiale minore sau medii, vătămare corporală.

După finalizarea instalării, asigurați-vă că aparatul funcționează adecvat în timpul funcționării de pornire. Vă rugăm instruiți clientul cu privire la modul de funcționare al aparatului și păstrați-l întreținut. De asemenea, informați clienții că trebuie să depoziteze acest manual de instalare împreună cu manualul de utilizare pentru consultări ulterioare.

AVERTIZARE

Asigurați-vă că doar personalul calificat din service va instala, repara sau realiza mentenanța echipamentului.

Instalarea neadecvată, reparațiile și întreținerea pot duce la electrocutare, scurtcircuite, scurgeri, incendii sau alte daune asupra echipamentului.

Instalați doar conform instrucțiunilor de instalare.

Dacă instalarea este greșită, acest lucru va duce la scurgeri de apă, electrocutare și incendiu.

La instalarea unității într-o cameră mică, luați masuri pentru a păstra concentrația agentului frigorific sub limita de siguranță permisă în cazul scurgerilor de agent frigorific. Contactați locația de vânzare pentru mai multe informații. Agentul frigorific în exces într-un mediu închis poate duce la o lipsă de oxigen.

Utilizați accesoriile atașate, piesele și componentele specifice instalării.
În caz contrar, acest lucru poate duce la căderea setului, scurgeri de apă, electrocutare și incendiu.

Instalați într-o locație solidă și fermă ce poate suporta greutatea setului.
Dacă suprafața nu este destul de solidă sau instalarea nu este realizată adecvat, setul va cădea și va duce la vătămare.

Aparatul trebuie instalat la 2,5 m deasupra podelei.

Aparatul nu trebuie instalat în spălătorie.

Înainte de a obține accesul la terminale, toate circuitele de alimentare trebuie deconectate.

Aparatul trebuie poziționat astfel încât priza să fie accesibilă.

Împrejurimile aparatului vor fi marcate prin cuvinte sau simboluri ce arată direcția scurgerii de lichide.

Pentru lucrările de natură electrică, urmați standardul național local de cablare, reglementările și aceste instrucțiuni de instalare. Un circuit independent și o singură priză vor fi folosite.
Dacă circuitul electric are capacitatea mai mică sau există defecte în lucrările electrice, acest lucru va duce la electrocutare sau incendiu.

Utilizați cablul specificat, conectați-l ferm și prindeți cu cleme cablul astfel încât să nu existe forțe externe care să acționeze asupra terminalului. Dacă conexiunea sau fixarea nu sunt perfecte, acest lucru poate duce la încălzirea sau arderea conexiunii.

Tragerea cablurilor trebuie să fie aranjată adecvat astfel încât capacul panoului de control să se fixeze bine.
Dacă capacul panoului de control nu se fixează perfect, acest lucru va duce la încălzirea punctului de legătură al terminalului, incendiu sau electrocutare.

Dacă cablul de alimentare este avariat, acesta trebuie înlocuit de către producător sau agentul său de service sau o persoană calificată pentru a evita un pericol.

Un comutator de deconectare multipolar ce are o separare de contact de cel puțin 3 mm la toți polii trebuie conectat la cablarea fixă.

Atunci când se realizează legarea conductelor, aveți grijă să nu permiteți substanțelor din aer să intre în ciclul agentului frigorific.
În caz contrar acest lucru va duce la o capacitate diminuată, presiune ridicată anormală în ciclul agentului frigorific, explozie și vătămare.

Nu modificați lungimea cablului de alimentare, nu utilizați un prelungitor și nu împărțiți o singură priză cu alte aparate electrice.
În caz contrar acest lucru poate duce la incendiu sau electrocutare.

Desfășurați lucrările de instalare specificate după ce ați luat în considerare vânturile puternice, furtunile și cutremurele.
O instalare neadecvată poate duce la căderea echipamentului și cauzarea de accidente.

Dacă agentul frigorific se scurge în timpul instalării, aerisiți imediat zona.
Gaze toxice pot fi produse dacă agentul frigorific intră în contact cu focul.

Temperatura circuitului agentului frigorific este ridicată, vă rugăm păstrați conexiunile de cabluri departe de conducta de cupru.

După finalizarea lucrărilor de instalare, verificați ca agentul frigorific să nu curgă.
Gaze toxice se pot produce dacă agentul frigorific se scurge în cameră și intră în contact cu o sursă de foc, de genul unui radiator cu ventilator, unei sobe sau unui aragaz.

ATENȚIE

Legați la împământare aparatul de aer condiționat.
Nu legați cablul de împământare la conductele de gaze sau apă, la paratrăsnete sau la un cablu telefonic subteran. Împământarea neadecvată poate duce la electrocutare.

Asigurați-vă că instalați un comutator de scurgeri cu împământare.
Neinstalarea unui comutator de scurgeri cu împământare poate duce la electrocutare.

Conectați cablurile unității exterioare, apoi conectați cablurile unității interioare.
Nu vă este permisă conectarea aparatului de aer condiționat la alimentara electrică până ce nu sunt realizate lucrările de cablare și legare a conductelor.

În timp ce urmați instrucțiunile din prezentul manual de instalare, instalați conductele de scurgere pentru a asigura o scurgere adecvată și izolați conductele pentru a preveni condensul.
Conducte de scurgere neadecvate pot duce la scurgeri de apă și daune materiale.

Instalați unitățile interioare și exterioare, cablurile de alimentare și conectați firele la cel puțin 1 m distanță de televizoare sau aparate de radio pentru a preveni interferențe ale imaginilor sau bruiaje.
În funcție de undele radio, o distanță de 1 m este posibil să nu fie suficientă pentru a elimina bruiajele.

Aparatul nu este destinat utilizării de către copii mici sau persoane cu dizabilități fără supraveghere.

Nu instalați aparatul de aer condiționat în următoarele cazuri:

- Există în zona petrolatum.
- Există un aer sărat în jur (în apropierea țărmului).
- Există gaze caustice (de exemplu sulfuri) în aer (în apropierea unui izvor cu apă caldă).
- Voltajul vibrează în mod violent (în fabrici).
- În autobuze sau dulapuri.
- În bucătărie unde există gaze petroliere.
- Unde există unde electromagnetice puternice.
- Unde există materiale sau gaze inflamabile.
- Unde există lichide acide sau alcaline care se evaporă.
- În alte condiții speciale.

Aparatul va fi instalat în conformitate cu reglementările naționale de cablare.

Nu puneți în funcțiune aparatul de aer condiționat într-o cameră cu umiditate de genul unei băi sau unei spălătorii.

Un dispozitiv de deconectare multipolar care are cel puțin 3 mm distanță de poli și care are un curent de scurgere ce poate depăși 10mA, dispozitivul de curent rezidual (RCD) ce are un curent rezidual de funcționare ce nu depășește 30mA, precum și o deconectare trebuie încorporate în cablarea fixă în conformitate cu reglementările de cablare.

INFORMAȚII PRIVIND INSTALAREA

- Pentru a instala adecvat, vă rugăm citiți mai întâi acest manual de instalare.
- Aparatul de aer condiționat trebuie instalat de către persoane calificate.
- La instalarea unității interioare sau a conductelor sale, vă rugăm urmați acest manual cât se poate de îndeaproape.
- Dacă aparatul de aer condiționat este instalat pe o parte metalică a unei clădiri, acesta trebuie izolat electric conform standardelor relevante aplicabile aparatelor electrice.
- La finalizarea tuturor lucrărilor de instalare, vă rugăm porniți aparatul doar după o verificare amănunțită.
- Ne pare rău pentru că nu vă vom putea anunța de schimbările asupra acestui manual cauzate de îmbunătățiri ale produsului.

ORDINEA INSTALĂRII

- Instalarea unității interioare;
- Instalarea unității exterioare;
- Instalarea conductei de agent frigorific;
- Legarea conductei de scurgere;
- Lucrări de cablare electrică
- Funcțiile unităților duble
- Testarea funcționării

ACCESORII INCLUSE

Vă rugăm verificați dacă următoarele accesorii pot fi toate utilizate. Dacă există accesorii de rezervă, vă rugăm să le depozitați cu atenție.

	DENUMIRE	FORMĂ	CANTITATE
Conducte și garnituri	1. Panou de instalare de carton		1 (la unele modele)
	2. Membrană fonică/ de izolare		1 (la unele modele)
	3. Membrană conductă exterioară		1 (la unele modele)
	4. Clemă conductă exterioară		1 (la unele modele)
Accesorii conductă de scurgere (pentru răcire și încălzire)	5. Racord scurgere		1 (la unele modele)
	6. Garnitură etanșare		1 (la unele modele)
Telecomandă și cadrul acesteia (a se potrivi cu telecomanda)	7. Telecomandă		1 (la unele modele)
	8. Suport telecomandă		1 (la unele modele)
	9. Șurub de montare (ST2,9x10-C-H)		2 (la unele modele)
	10. Baterii uscate alcaline (Am4)		2 (la unele modele)
	11. Manual telecomandă	—	1 (la unele modele)
Controlor cu fir și cadrul acestuia (a se potrivi cu controlorul cu fir)	12. Controlor cu fir	—	1 (la unele modele)
	13. Manual de utilizare controlor cu fir	—	1 (la unele modele)
	14. Manual de instalare controlor cu fir	—	1 (la unele modele)
Accesoriu de instalare (produsul dvs. poate să nu conțină acest accesoriu)	15. Cârlig extensibil		4
	16. Cârlig de instalare		4
EMC și accesoriile sale (pentru unele modele)	17. Inel magnetic (se răsucesc firele electrice L și N în jurul inelului magnetic de cinci ori)	L N	1
Altele	18. Manual de utilizare	—	1
	19. Manual de instalare	—	1

1. INSTALAREA UNITĂȚII INTERIOARE

1.1 Locația instalării

Unitatea interioară trebuie instalată într-un loc care întrunește următoarele cerințe:

- Există suficient spațiu pentru instalare și întreținere.
- Tavanul este orizontal, iar structura sa poate suporta greutatea unității interioare.
- Evacuarea și admisia aerului nu sunt obstrucționate, iar influența aerului extern este minimă.
- Fluxul de aer poate ajunge în toată camera.
- Conducta de legătură și cea de scurgere pot fi extrase cu ușurință.
- Nu există încălzire directă de la radiatoare.

ATENȚIE

Păstrați unitatea interioară, unitatea exterioară, cablul de alimentare și cablul de transmisie la cel puțin 1 metru de televizoare sau aparate de radio. Acest lucru trebuie să prevină interferențele de imagini și bruiajul acelor aparate electronice. (Bruiajele pot fi generate în funcție de condițiile în care sunt generate undele electrice, chiar dacă se păstrează distanța de 1 metru.)

NOTĂ

Toate imaginile din prezentul manual au doar scop explicativ. Acestea pot fi ușor diferite de aparatul de aer condiționat achiziționat de dvs. (în funcție de model). Forma reală va fi cea care se va lua în considerare.

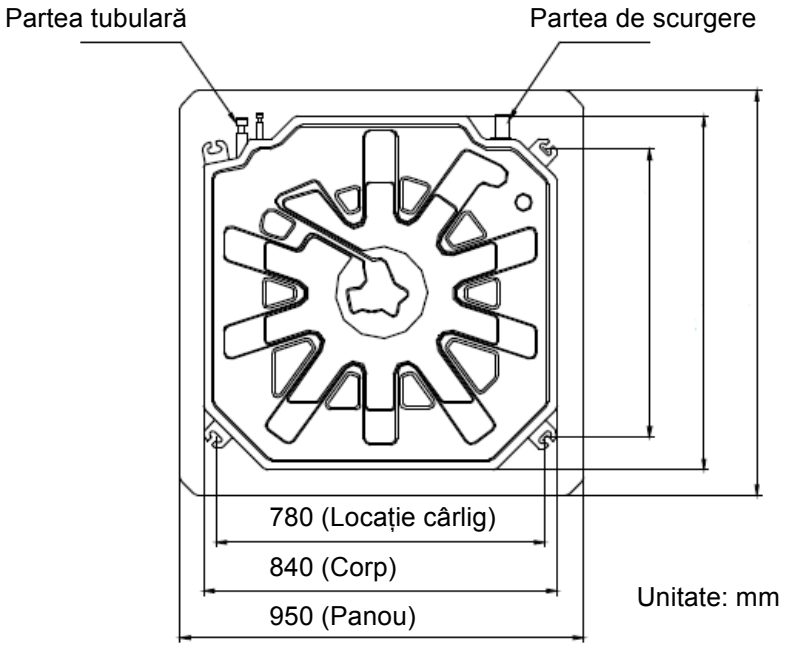

Fig.1-1

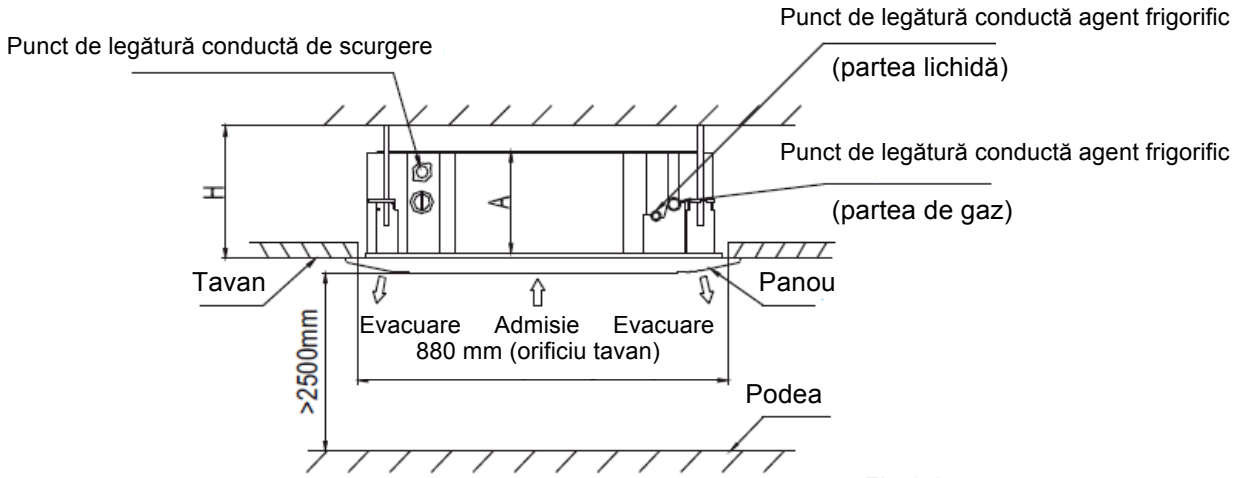

Fig.1-2

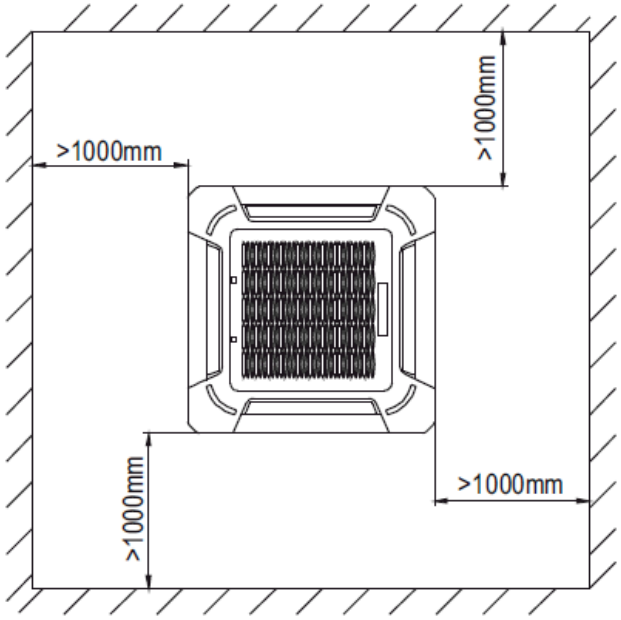

Fig.1-3

Unitate: mm

MODEL (Btu/h)	A	H
18K	205	235
24K / 30K / 36K / 42K	245	275
48K / 55K	287	317

1.2 Instalarea corpului principal

- **Tavanul existent (să fie orizontal)**

1. Decupați un orificiu pătrat de 880x880mm în tavan conform cu forma cartonului pentru instalare. (consultați Fig. 1-2)
   - Centrul orificiului trebuie să fie în aceiași poziție ca și cel al corpului aparatului de aer condiționat.
   - Stabiliți lungimile și evacuările conductelor de legătură, a conductelor de scurgere și a cablurilor.
   - Pentru a echilibra tavanul și a evita vibrațiile, vă rugăm întăriți tavanul acolo unde este nevoie.

2. Alegeți poziția cârligelor de instalare conform orificiilor pentru cârlige de pe panoul de instalare.
   - Găuriți patru orificii cu diametrul de 2mm, lungi de 45-50mm în pozițiile alese pe tavan. Apoi inserați cârligele extensibile (accesorii).
   - Așezați partea concavă a cârligelor de instalare spre cârligele extensibile. Stabiliți lungimea cârligelor de instalare comparativ cu înălțimea tavanului, apoi tăiați partea inutilă.
   - Dacă tavanul este foarte sus, vă rugăm stabiliți lungimea cârligului de instalare conform datelor.

3. Ajustați piulițele hexagonale pe cele patru cârlige de instalare în mod egal pentru a asigura echilibrarea corpului aparatului.
   - Dacă conducta de evacuare este strâmbă, vor apărea scurgerile din cauza defectării comutatorului pentru nivelul de apă.
   - Ajustați poziția pentru a vă asigura că spațiul dintre corp și cele patru părți ale tavanului sunt egale. Partea de jos a corpului trebuie să intre în tavan cu 10-12mm. (Consultați Fig. 1-4)
   - În general, L este egală cu jumătate din lungimea cârligului de instalare. (Consultați Fig. 1-4)
   - Fixați bine aparatul de aer condiționat prin strângerea cu cheie a piulițelor după ajustarea exactă a poziției corpului (Consultați Fig. 1-5)

- **Locuințe și tavane nou construite**

1. În cazul locuințelor nou construite, cârligul poate fi inserat în avans (consultați punctul 2 de mai sus). Însă trebuie să fie suficient de solid pentru a suporta unitatea interioară și să nu se desprindă din cauza micșorării betonului.

2. După instalarea corpului, vă rugăm fixați cartonul pentru instalare pe aparatul de aer condiționat cu ajutorul șuruburilor (M6X12) pentru a stabili în avans dimensiunile și pozițiile orificiului deschis de pe tavan (Consultați Fig. 1-6)
   - Vă rugăm asigurați mai întâi o suprafață netedă și orizontală a tavanului la instalare.
   - Consultați punctul 1 de mai sus pentru celelalte etape.

3. Consultați punctul 3 de mai sus pentru instalare.

4. Îndepărtați cartonul pentru instalare.

ATENȚIE

După instalarea corpului, cele patru șuruburi (M6x12) trebuie strânse de aparatul de aer condiționat pentru a asigura prinderea bună a corpului.

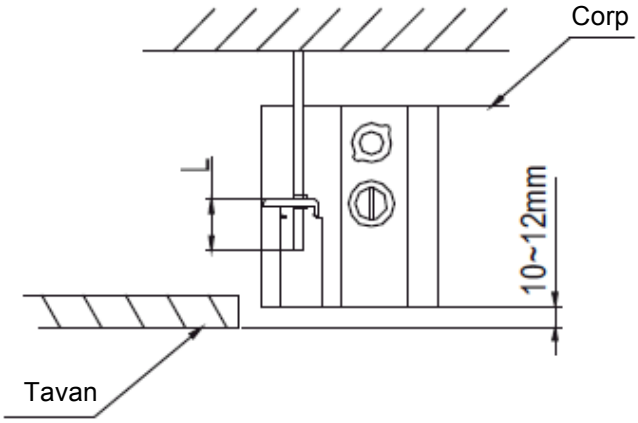

Fig.1-4

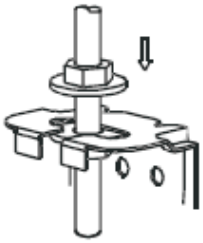

Fig.1-5

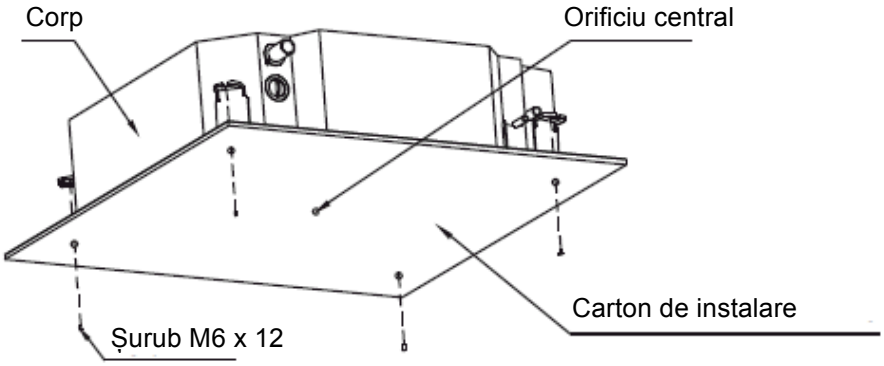

Fig.1-6

1.3 Instalarea panoului

ATENȚIE

Nu așezați panoul cu fața în jos sau pe podea lipit de perete sau pe obiecte masive.
Nu îl scăpați și nu îl loviți.

1. **Îndepărtați grilajul de admisie aer**
   - Glisați cele două butoane ale grilajului către mijloc în același timp, apoi trageți în sus de ele (Consultați Fig. 1-7)
   - Trageți de grilaj în unghi de aproximativ 45 grade, și scoateți-l. (Consultați Fig. 1-8)

2. **Îndepărtați capacele de instalare din cele patru colțuri**
   - Desfaceți cu cheia șuruburile, slăbiți sfoara capacelor de instalare și scoateți-le (Consultați Fig. 1-9)

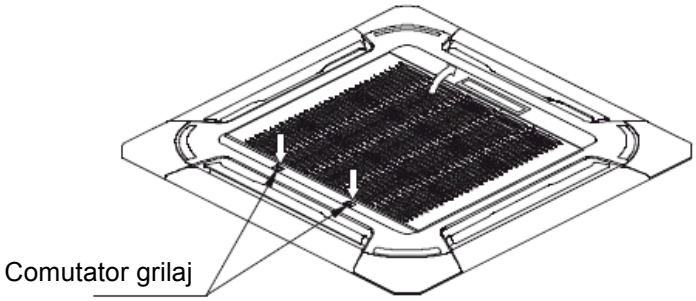

Fig.1-7

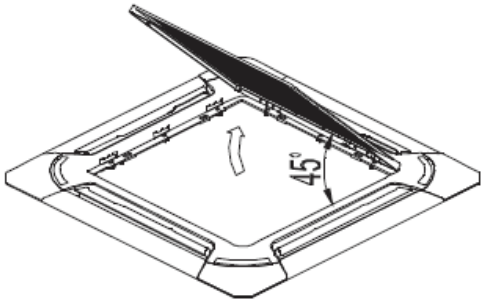

Fig.1-8

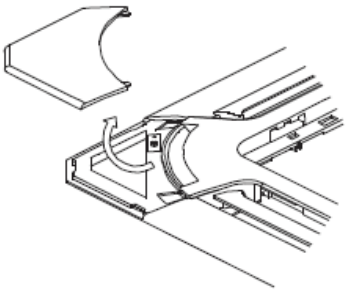

Fig.1-9

3. **Instalați panoul**

- Aliniați motorul de oscilare de pe panou la racordurile conductei corpului în mod corect. (Consultați Fig. 1-10)
- Fixați cârligele panoului la motorul de oscilare și părțile sale opuse la colectoarele corespunzătoare de apă. (Consultați Fig. 1-10.1)
  Apoi agățați celelalte două cârlige ale panoului pe agățătoarele corespunzătoare ale corpului aparatului. (Consultați Fig. 5-10.2)

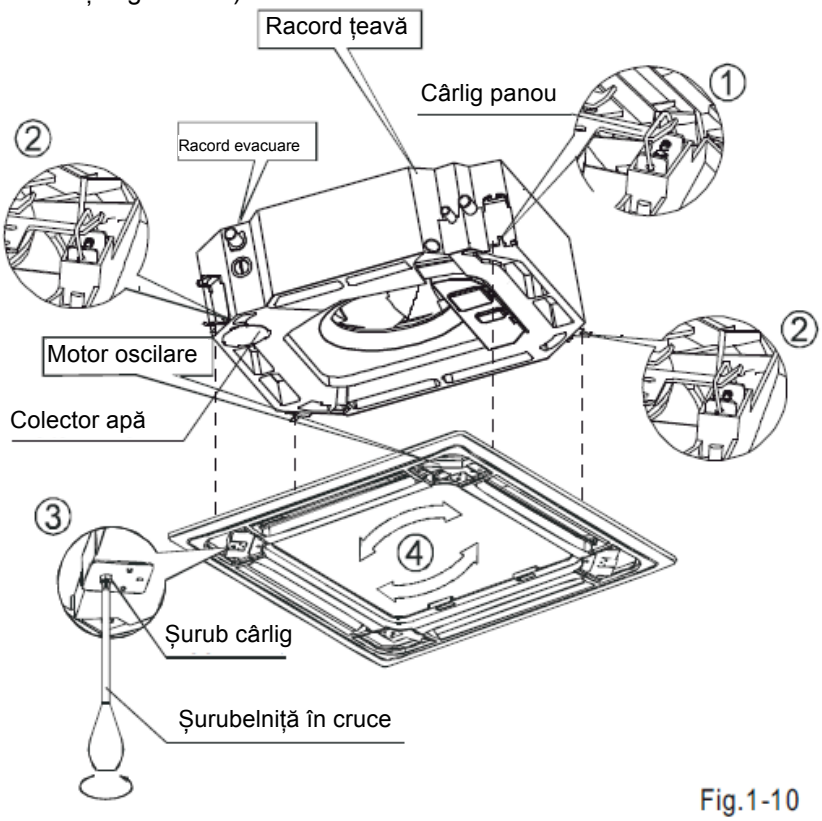

Fig.1-10

ATENȚIE

Nu înfășurați cablurile motorului de oscilare pe buretele de etanșare.

- Ajustați cele patru șuruburi cu cârlig ale panoului pentru a păstra panoul orizontal, apoi înșurubați-le pe tavan în mod egal. (Consultați Fig. 1-10.3)
- Potriviți ușor panoul în direcția săgeții din Fig. 1-10.4 pentru a potrivi centrul panoului cu centrul orificiului din tavan. Asigurați-vă că sunt strânse bine cârligele din cele patru colțuri.
- Continuați să strângeți șuruburile de sub cârligele panoului, până ce grosimea buretelui dintre corp și evacuarea panoului este redusă la doar 4-6mm. Marginea panoului trebuie să atingă bine tavanul (Consultați Fig. 1-11)
- Defecțiunile descrise în Fig. 1-12 pot fi cauzate de o strângere neadecvată a șuruburilor.
- Dacă diferența dintre panou și tavan mai există după strângerea șuruburilor, înălțimea unității interioare trebuie din nou modificată. (Consultați Fig. 1-13-stânga)
- Puteți modifica înălțimea unității interioare prin deschiderile de pe panou din cele patru colțuri, dacă ridicarea unității interioare și a conductei de scurgere nu sunt influențate de acest lucru (Consultați Fig. 1-13-dreapta)

4. **Agățați grilajul de admisie aer de panou, apoi conectați terminalul de plumb la motorul de oscilare și cel al panoului de control la terminalele corespunzătoare de pe corpul respectiv.**

5. **Reamplasați grilajul de admisie aer conform procedurii în ordine inversă.**

6. **Reamplasați capacul de instalare.**

- Strângeți sfoara capacului de instalare pe șurubul de pe capacul de instalare (Consultați Fig. 1-14-stânga)
- Apăsați capacul de instalare ușor pe panou. (Consultați Fig. 1-14-dreapta)

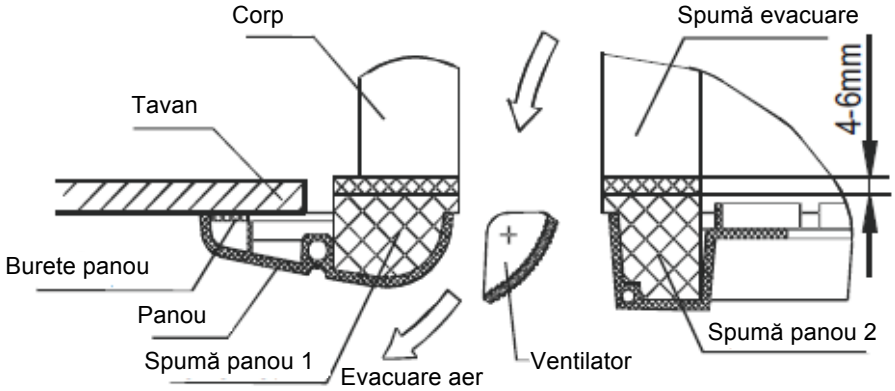

Fig.1-11

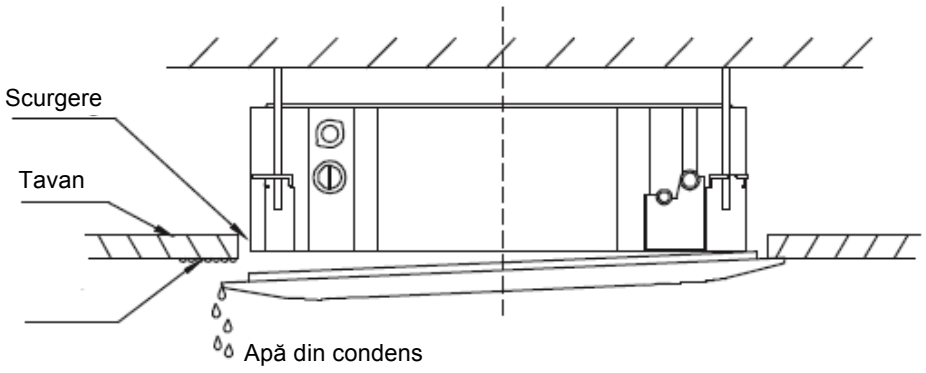

Fig.1-12

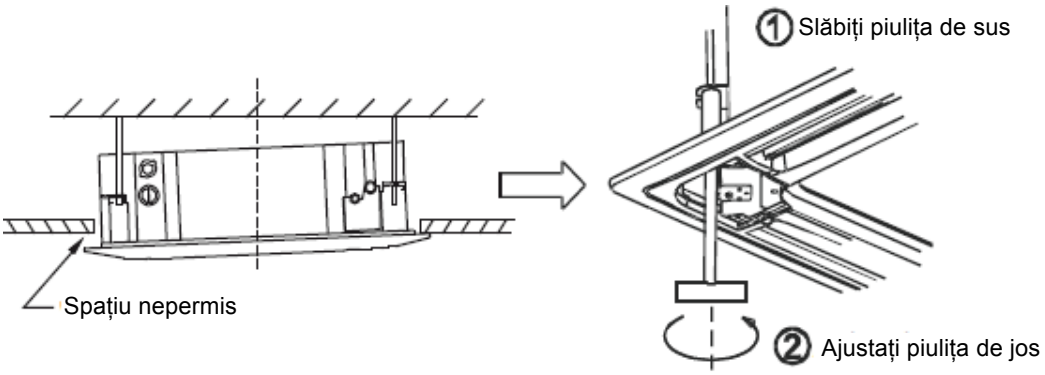

Fig.1-13

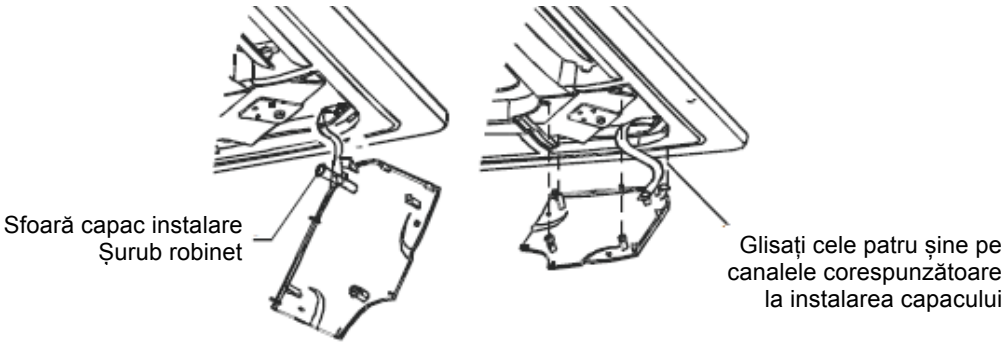

Fig.1-14

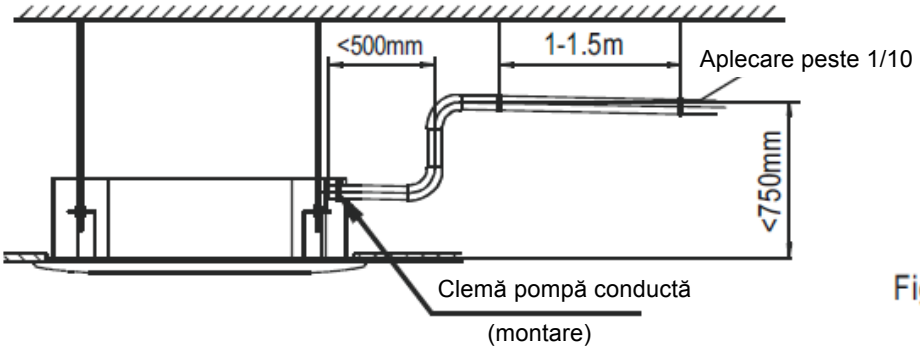

Fig.1-15

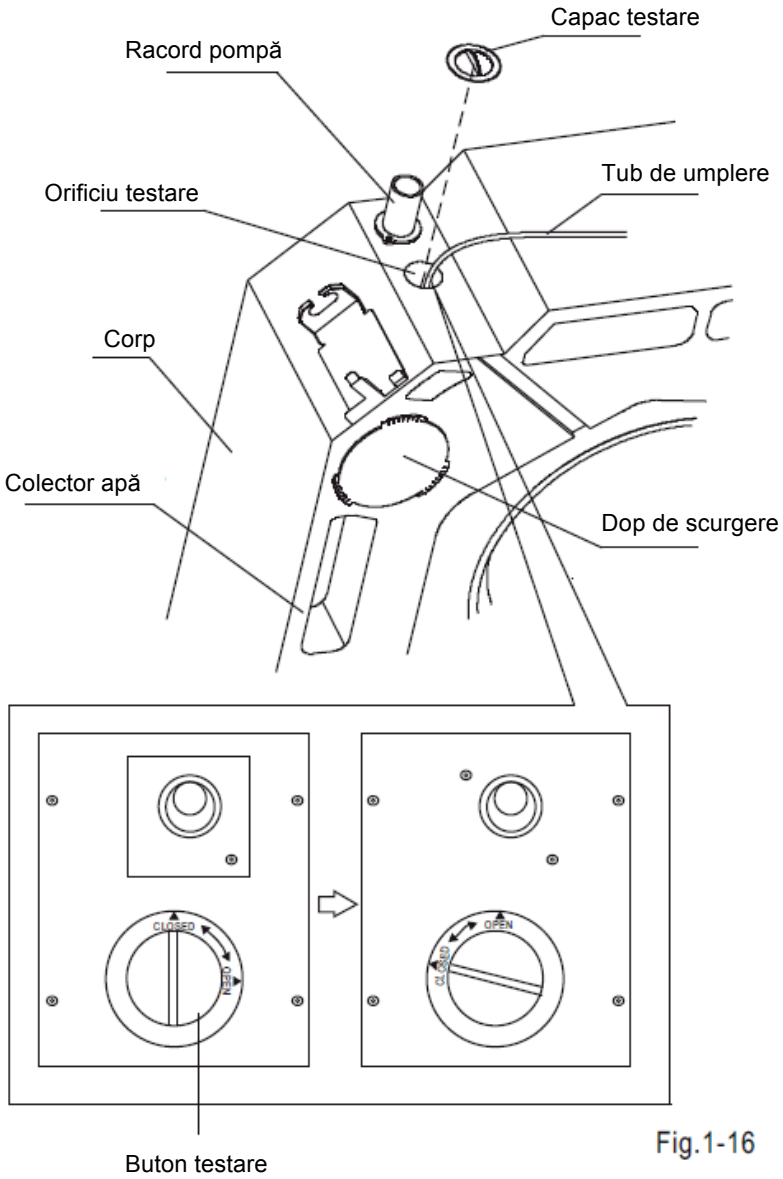

Fig.1-16

■ **Test de scurgere**

- Verificați dacă conducta de scurgere este intactă.
- Locuințele nou construite trebuie să facă acest test înainte de finalizarea tavanului.

■ **Unitatea cu pompă**

1. Îndepărtați capacul de test și umpleți cu aproximativ 2000 ml de apă tava de apă.

2. Porniți funcționarea aparatului de aer condiționat în modulul „RĂCIRE (COOL)”. Sunetul pompei de scurgere trebuie să se audă. Verificați dacă apa este bine evacuată (cu întârziere de 1 min dacă se poate, conform lungimii conductei de scurgere) și verificați dacă apa curge pe la racorduri.

3. Opriți aparatul de aer condiționat și așezați din nou capacul.

1.4 Instalarea canalului de distribuție

Aerul condiționat poate fi distribuit prin intermediul unui canal de distribuție.

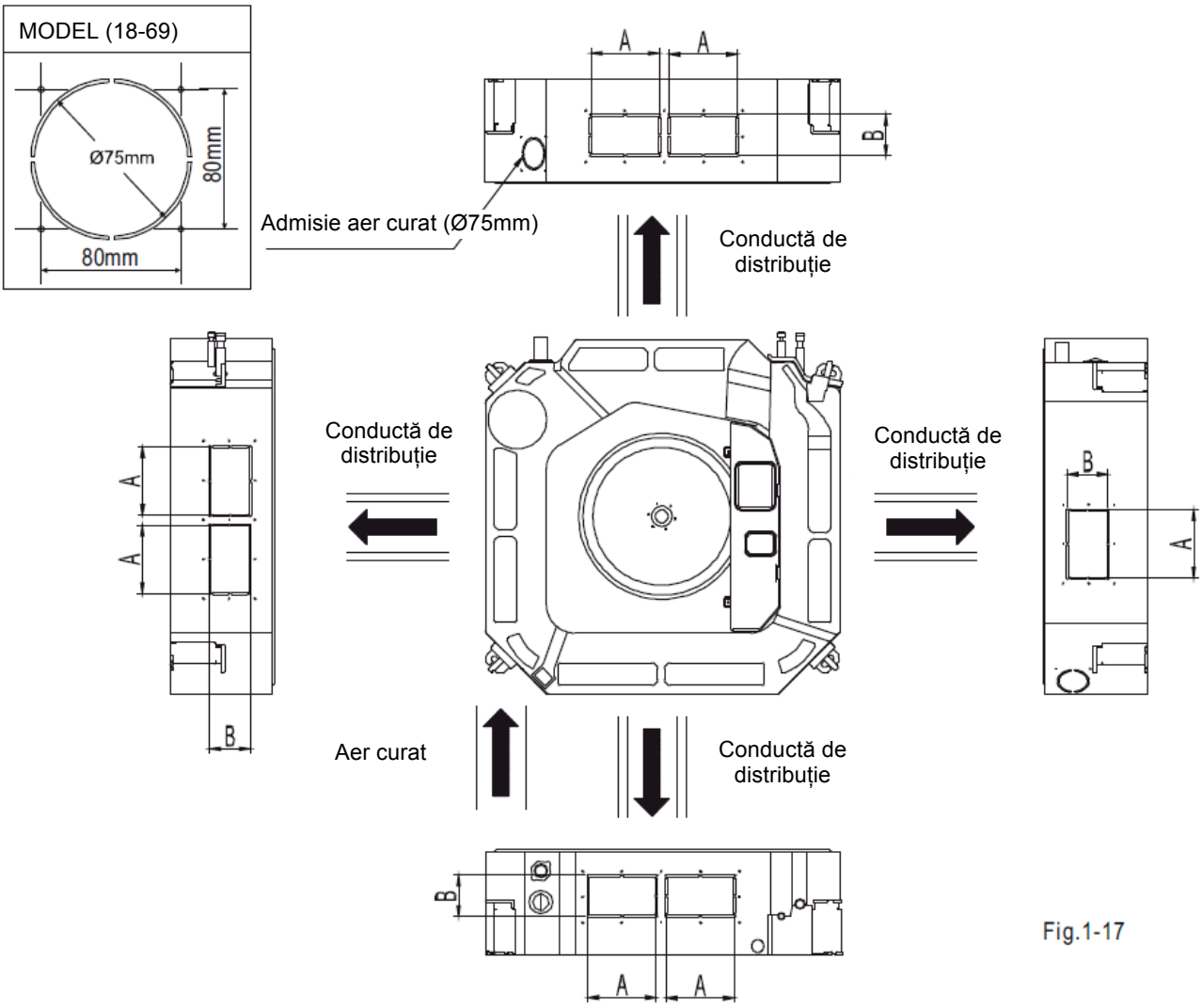

Fig.1-17

NOTĂ

Model de la 18 la 30	Seria A=160mm; Seria B=75mm
Model de la 36 la 60	Seria A=160mm; Seria B=95mm

În cazul legăturii pe un singur canal

Volumul de aer pe canal este în jur de 300-360m3/h pentru modelul de la 18 la 30 unități.
Volumul de aer pe canal este în jur de 400-640m3/h pentru modelul de la 36 la 60 unități.
Lungimea maximă a canalului este de 2m.
Evacuarea de aer inițială cu aceiași direcție a canalului trebuie sigilată în cazul unei legături cu două canale.

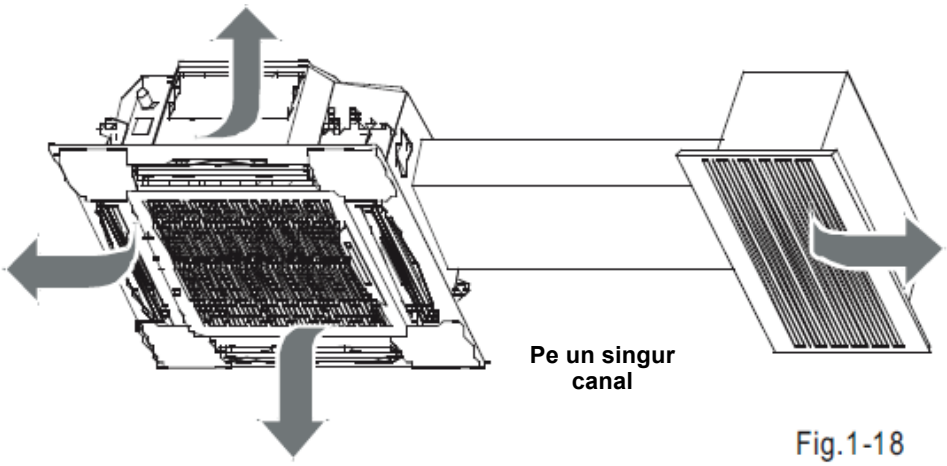

Fig.1-18

În cazul legăturii pe două canale

Volumul de aer pe un canal este în jur de 200-260m3/h pentru modelul de la 18 la 30 unități.
Volumul de aer pe un canal este în jur de 300-500m3/h pentru modelul de la 36 la 60 unități.
Lungimea maximă a canalului este de 1,5m pentru un canal.
Evacuarea de aer inițială cu aceiași direcție a canalului trebuie sigilată.

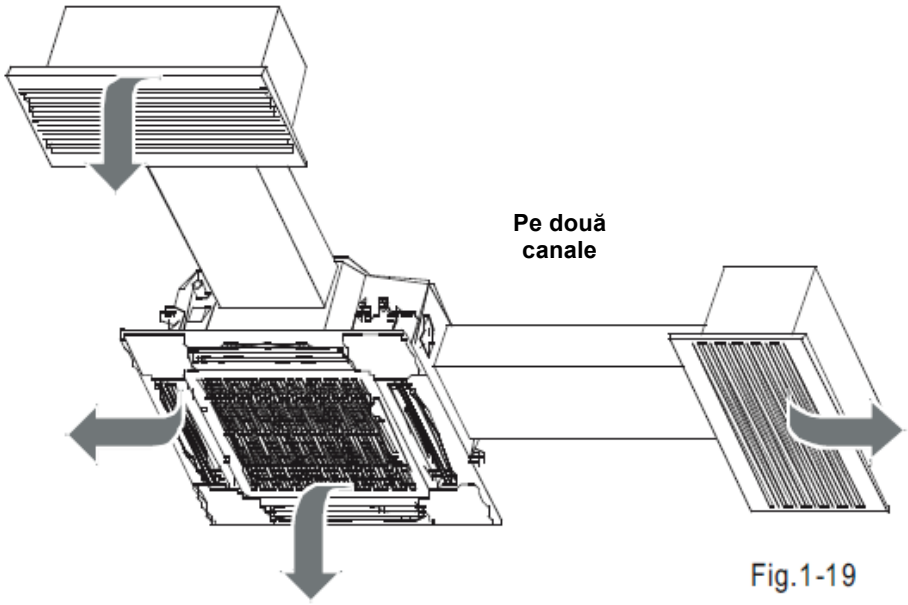

Fig.1-19

2. INSTALAREA UNITĂȚII EXTERIOARE

2.1 Precauții în alegerea unei locații

1) Alegeți un loc suficient de solid să suporte greutatea și vibrația aparatului, acolo unde zgomotul funcționării nu va fi amplificat.
2) Alegeți o locație în care aerul cald emanat de unitate sau zgomotul funcționării nu va crea neplăceri vecinilor sau utilizatorului.
3) Evitați locurile de genul unui dormitor pentru ca zgomotul funcționării să nu fie deranjant.
4) Trebuie să existe suficient spațiu pentru a duce aparatul la locație și a-l aduce de la locație.

5) Trebuie să existe suficient spațiu pentru trecerea aerului și să nu existe blocaje în jurul admisiei și evacuării de aer.
6) La locație nu trebuie să existe posibilitatea scurgerii de gaze inflamabile din apropiere.
7) Instalați unitățile, cablurile de alimentare și cablurile dintre unități la cel puțin 3 m distanță de televizoare și aparate de radio. Acest lucru este pentru a preveni interferența cu imaginile și sunetele. (Bruiajele pot fi auzite chiar dacă sunt mai departe de 3 m în funcție de condițiile undelor radio.)
8) În zonele de țărm sau în alte locuri cu atmosferă sărată și cu gaze de sulf, coroziunea poate scurta durata de viață a aparatelor de aer condiționat.
9) Deoarece există scurgeri din unitatea exterioară, nu amplasați sub unitate nimic ce trebuie ținut departe de umezeală.

NOTĂ: Nu poate fi instalatagățat de tavan sau stivuit.

ATENȚIE

Atunci când aparatul de aer condiționat funcționează la o temperatură ambientală exterioară scăzută, asigurați-vă că urmați instrucțiunile descrise mai jos.

- Pentru a preveni expunerea la vânt, instalați unitatea exterioară cu partea de vid spre perete.
- Nu instalați niciodată unitatea exterioară în locuri în care partea de vid poate fi expusă direct la vânt.
- Pentru a preveni expunerea la vânt, se recomandă instalarea unei plăci de protecție pe partea de evacuare aer a unității exterioare.
- În zonele cu căderi masive de zăpadă, alegeți o locație de instalare în care zăpada să nu afecteze unitatea.

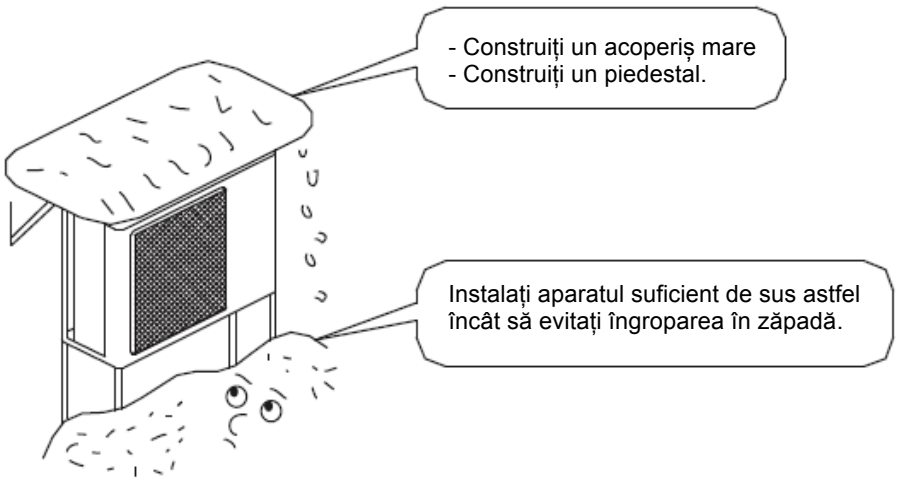

2.2 Figura dimensională a corpului aparatului

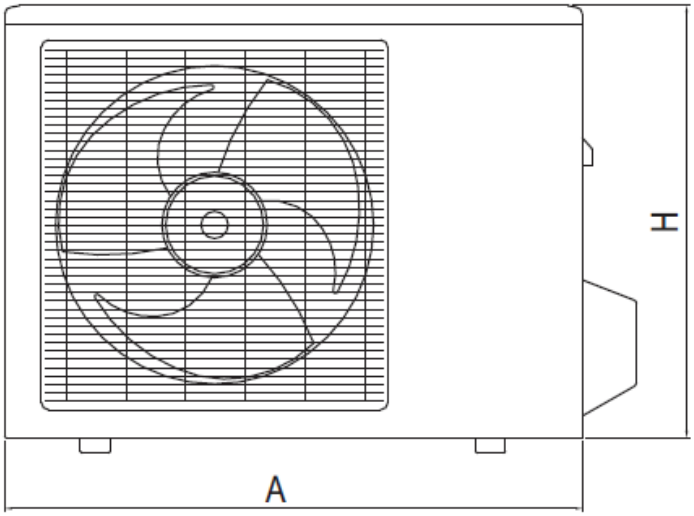

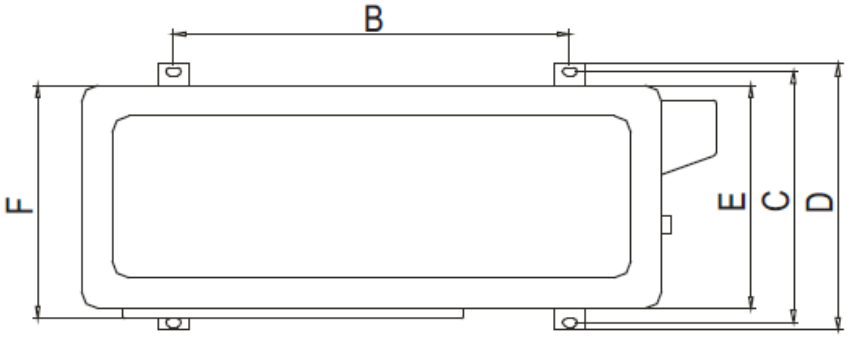

Unit:mm

MODEL(Btu/h)	A	B	C	D	E	F	H
12K/18K	810	549	325	350	305	310	558
24K	845	560	335	360	312	320	700
30K/36K/42K	945	640	405	448	385	395	810
48K/55K	938	634	404	448	368	392	1369

2.3 Indicații pentru instalare

- Acolo unde există un zid sau un alt obstacol în calea admisiei și evacuării de aer a unității exterioare, urmați sfaturile pentru instalare de mai jos.
- Pentru oricare din metodele de instalare de mai jos, înălțimea peretelui de pe partea cu evacuarea trebuie să fie de 1200 mm sau mai puțin.

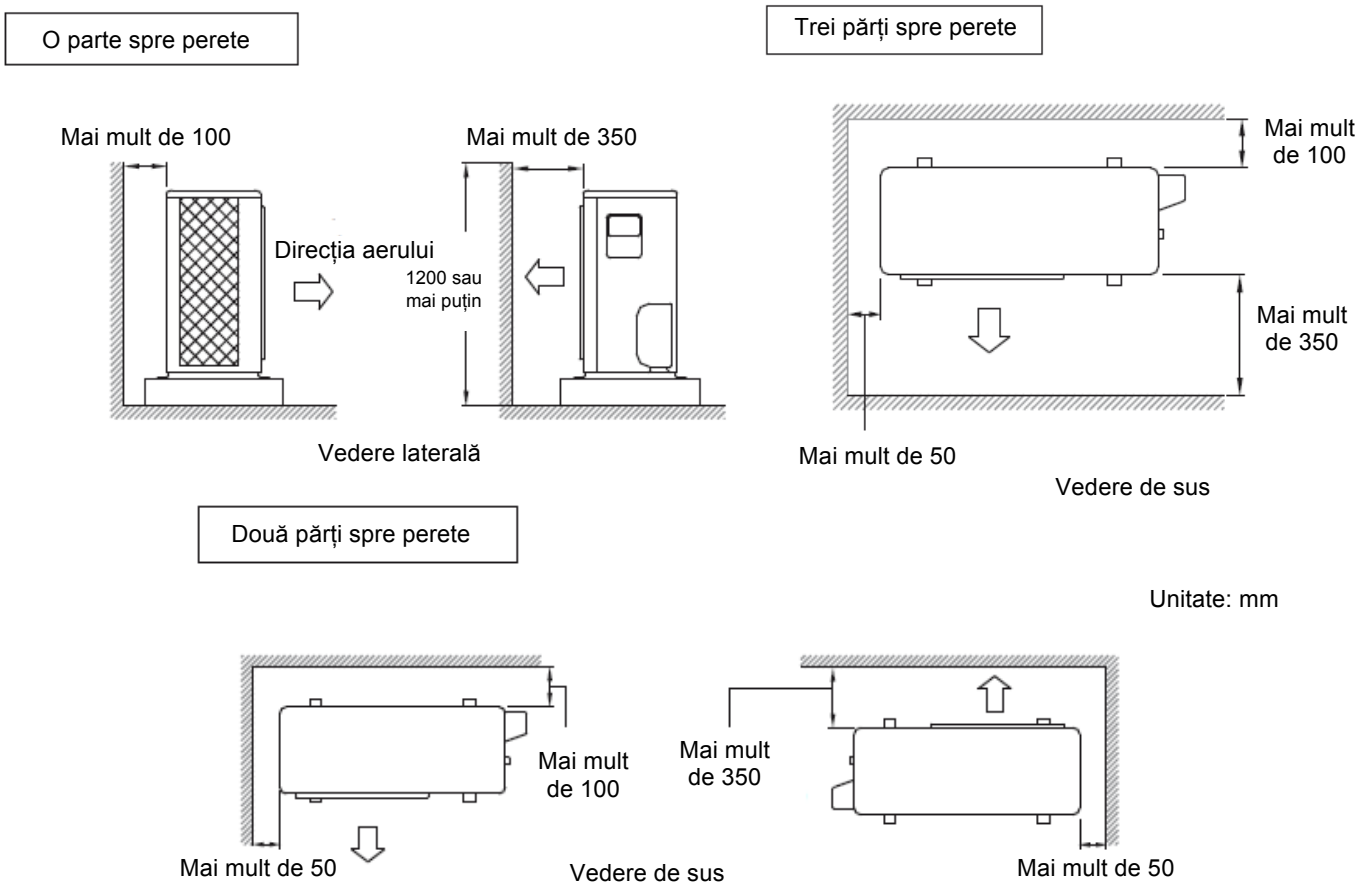

2.4 Instalarea unității exterioare

1) Instalarea unității exterioare

- La instalarea unității exterioare, vă rugăm consultați precauțiile în alegerea locației.
- Verificați baza solidă și nivelul suprafeței de instalare astfel încât unitatea să nu producă vibrații sau zgomote în funcționare după instalarea ei.
- Fixați unitatea în siguranță cu ajutorul șuruburilor pentru fundație. (Pregătiți patru seturi de șuruburi de fundație M8 sau M10, piulițe și șaibe, fiecare dintre acestea fiind disponibile pe piață.)

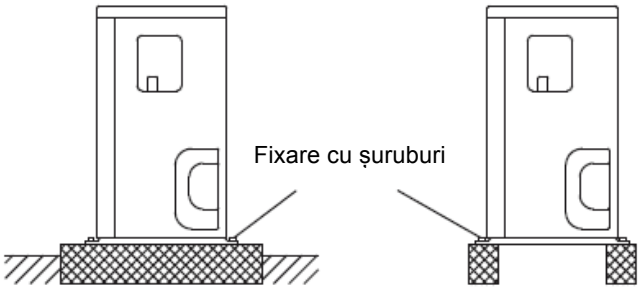

2) Lucrări pentru scurgere

- Dacă sunt necesare lucrări de scurgere, urmați procedurile de mai jos.
- Utilizați un dop de scurgere pentru evacuare.
- Dacă portul de scurgere este acoperit de o bază de montare sau o suprafață de podea, amplasați o bază suplimentară la cel puțin 30 mm înălțime sub picioarele unității exterioare.
- În zonele reci, nu utilizați un furtun de scurgere pentru unitate exterioară. (În caz contrar apa scursă poate îngheța, afectând performanța de încălzire.)

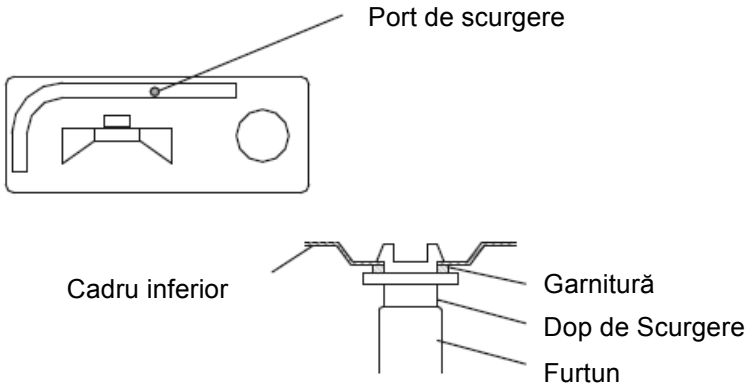

3. INSTALAREA CONDUCTEI DE AGENT FRIGORIFIC

Toate conductele de la locație trebuie furnizate de către un tehnician frigotehnist autorizat și trebuie să se conformeze cu reglementările relevante locale și naționale.

Precauții

- Realizați lucrările de izolare împotriva căldurii complet pe ambele părți ale conductei de gaz și conductei de lichide. În caz contrar acest lucru poate duce uneori la scurgeri de apă.
  (La utilizarea unei pompe de căldură, temperatura gazului din conducte poate atinge temperaturi de aproximativ 120°C. Utilizați o izolație suficient de rezistentă.)
- De asemenea, în cazurile în care temperatura și umiditatea din părțile cu conducte de agent frigorific depășește 30°C sau RH 80%, întăriți izolarea de agent frigorific (20 mm sau mai groasă).
  Condensul se poate forma pe suprafața materialului de izolare.
- Înainte de conectarea conductelor verificați tipul de agent frigorific utilizat.
- Folosiți un dispozitiv de tăiat țevi și de expansiune pentru agentul frigorific utilizat.
- Folosiți doar material emailat pentru conexiunile de expansiune.
- Nu amestecați decât agentul frigorific specificat, nu permiteți ca aerul, etc. să pătrundă în circuitul agentului frigorific.
- Dacă agentul frigorific se scurge în timpul lucrării, aerisiți zona. Gaze toxice pot fi emise de către agentul frigorific și se transformă în gaz atunci când sunt expuse la foc.

- Asigurați-vă că nu există scurgeri are gazelor frigorifice. Gaze toxice pot fi eliberate în atmosferă din cauza agentului frigorific ce se scurge la interior și este expus la flăcările de la un radiator din zonă, o sobă, etc.
- Consultați tabelul de mai jos pentru dimensiunile spațiilor piulițelor și cuplul de torsiune adecvat. (Strângerea în exces poate avaria piulița și poate cauza scurgeri.)

Calibru țeavă	Cuplu de torsiune	Dimensiune expansiune A(mm)	Formă expansiune
Ø6.35	15 ~ 16 N. m (153~163 kgf.cm)	8.3 ~ 8.7	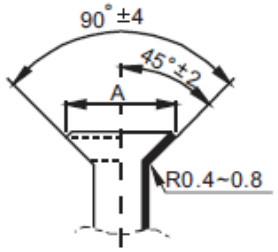
Ø9.52	25 ~ 26 N. m (255~265 kgf.cm)	12.0 ~ 12.4	
Ø12.7	35 ~ 36 N. m (357~367 kgf.cm)	15.4 ~ 15.8	
Ø15.9	45 ~ 47 N. m (459~480 kgf.cm)	18.6 ~ 19.0	

- Verificați dacă înălțimea de cădere dintre unitatea interioară și unitatea exterioară precum și lungimea conductei de agent frigorific întrunesc următoarele cerințe:

Tipul de modele	Capacitate (Btu/h)	Lungimea maxim permisă a țevii	Înălțimea maxim permisă a țevii
Aparat de aer condiționat de tip split cu invertor R410A	<15000	25 m	10 m
	≥15000 ~ <24000	30 m	20 m
	≥24000 ~ <36000	50 m	25 m
	≥36000 ~ <60000	65 m	30 m

3.1 Expansiunea capătului conductei

1) Tăiați capătul conductei cu un dispozitiv de tăiat țevi.
2) Îndepărtați bavura ținând partea tăiată în jos astfel încât bavura să nu pătrundă în conductă.

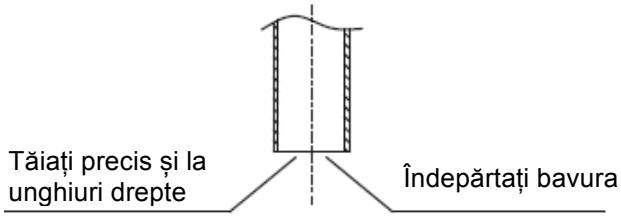

3) Așezați piulița de legătură pe țeavă.
4) Expandați țeava.

Setați exact la poziția de mai jos

Diametru exterior	A (mm)	
	Max.	Min.

Ø6.35	1.3	0.7
Ø9.52	1.6	1.0
Ø12.7	1.8	1.0
Ø15.9	2.2	2.0

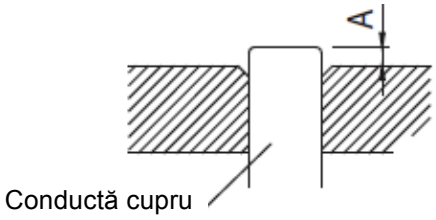

5) Verificați dacă expansiunea este realizată corect.

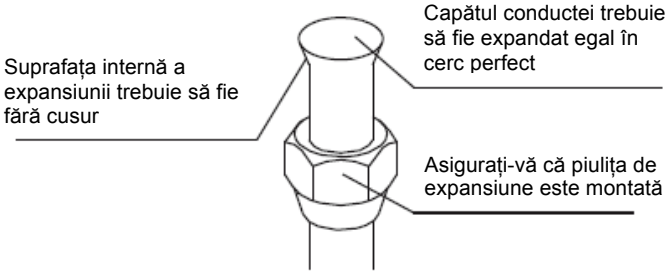

3.2 Legarea conductelor de agent frigorific

- Ungeți expansiunea atât la interior, cât și la exterior cu ulei eteric și ulei esteric.

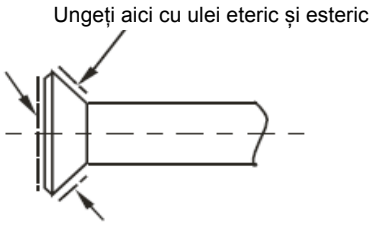

- Aliniați partea centrală a ambelor expansiuni și strângeți piulițele 3 și 4 pe rând, cu mâna. Apoi strângeți-le complet cu cheia dinamometrică.

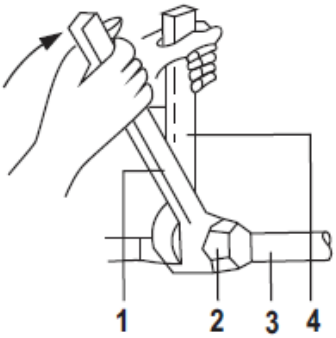

1. Cheie dinamometrică
2. Piuliță pentru expansiune
3. Unirea țevilor
4. Cheie de piulițe

3. Purjarea aerului și verificarea scurgerilor de gaze

- Atunci când lucrarea pentru conducte este finalizată, este necesară purjarea aerului și verificarea scurgerilor de gaze.

ATENȚIE

- Nu amestecați substanțele cu excepția celor specificate ca și agent frigorific în ciclul agentului frigorific.
- Când apar scurgeri de gaze al agentului frigorific, aerisiți camera imediat.
- Agentul frigorific specificat trebuie întotdeauna recuperat și nu trebuie niciodată eliberat direct în mediul înconjurător.
- Folosiți o pompă în vid pentru agentul frigorific specificat. Folosirea aceleiași pompe în vid pentru diverși agenți frigorifici poate avaria pompa în vid a unității.

- Dacă se utilizează agent frigorific suplimentar, verificați purjarea de aer și scurgerea conductelor de agent frigorific ale unității interioare cu o pompă în vid, apoi încărcați cu agentul frigorific suplimentar.
- Utilizați o cheie hexagonală (4 mm) pentru a muta tija supapei de oprire.
- Toate racordurile conductei de agent frigorific trebuie strânse cu o cheie dinamometrică la un cuplu de torsiune specificat.

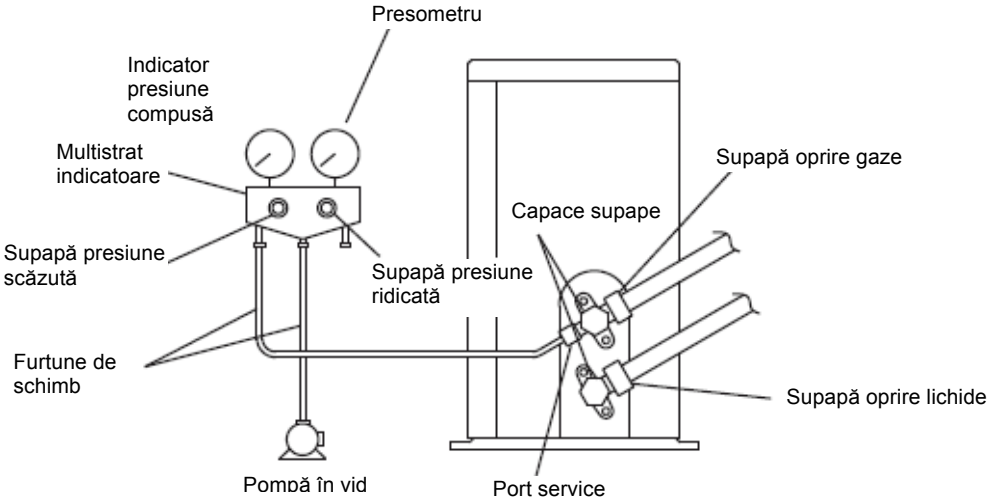

1) Conectați partea ridicată a furtunului de încărcare (ce provine de la multistratul indicatoarelor) la portul de service al supapei de oprire.
2) Deschideți complet supapa de presiune scăzută multistrat (Lo) și închideți complet supapa de presiune ridicată (Hi) (Supapa de presiune ridicată nu necesită în consecință nicio acțiune)
3) Realizați pomparea în vid și asigurați-vă că indicatorul de presiune compusă afișează -0.1MPa (-76cmHg). *1
4) Închideți supapa de presiune scăzută multistrat (Lo) și opriți pompa în vid.
(Mențineți această stare câteva minute pentru a vă asigura că indicatorul de presiune compusă nu se schimbă înapoi.)*2
5) Înlăturați capacele de la supapa de oprire lichide și de la supapa de oprire gaze.
6) Rotiți tija supapei de oprire lichide la 90 de grade în sens invers acelor de ceasornic cu o cheie hexagonală pentru a deschide supapa.
Închideți-o după 5 secunde și verificați dacă există scurgeri de gaze.

Folosind soluție de apă cu săpun, verificați scurgerile de gaze din expansiunea unității interioare și cea a unității exterioare, precum și din tijele de supapă.
După ce verificarea este completă, ștergeți soluția de apă cu săpun.
7) Deconectați furtunul de încărcare de la portul de service al supapei de oprire gaze, apoi deschideți complet lichidul și supapele de oprire gaze.
(Nu încercați să forțați tija supapei peste punctul de oprire)
8) Strângeți capetele supapelor și capetele porturilor de serviciu pentru lichide și supapele de oprire gaze cu o cheie dinamometrică la cuplul de torsiune specificat.
*1 Lungime conductă versus timpul de funcționare al pompei în vid

Lungime conductă	Până la 15 m	Mai mare de 15 m
Timpul de funcționare	Nu mai puțin de 10 minute	Nu mai puțin de 15 min

*2 Dacă indicatorul de presiunea compusă revine la poziția inițială, agentul frigorific poate să conțină apă sau poate exista un racord slăbit. Verificați toate racordurile conductelor și strângeți din nou piulițele dacă este necesar, apoi repetați etapele de la 2) la 4).

3.4 Încărcarea suplimentară de agent frigorific

ATENȚIE

- Agentul frigorific poate fi încărcat doar după efectuarea testului de scurgeri și pomparea în vid.
- Verificați tipul de agent frigorific ce va fi utilizat pe plăcuța de identificare a echipamentului. Schimbarea agentului frigorific cu unul nepotrivit poate cauze explozie și accidente, astfel că asigurați-vă că este încărcat agentul frigorific adecvat.
- Containerele de agent frigorific vor fi deschise cu grijă.

- Unitatea exterioară este încărcată din fabrică cu agent frigorific. Calculați agentul frigorific adăugat conform diametrului și lungimii conductei de lichide a conexiunii unității interioare / exterioare.

Lungime conductă și cantitate agent frigorific:

Lungime conductă de legătură	Metoda de purjare aer	Cantitate suplimentară de agent frigorific ce va fi încărcat	
Mai puțin de 5 m	Utilizați pompa în vid	————	
Mai mult de 5 m	Utilizați pompa în vid	Partea cu lichid: Ø6.35mm R410A:(l-5)x15g/m	Partea cu lichid: Ø9.52mm R410A:(l-5)x15g/m

- Asigurați-vă că adăugați cantitatea adecvată de agent frigorific suplimentar. Nerespectarea acestei indicații poate duce la o performanță de funcționare redusă.

3.5 Lucrări pentru conductele agentului frigorific

1) Atenție la manevrarea conductelor

- Protejați capătul deschis al conductei de praf și umezeală.
- Toate îndoirile de țeavă trebuie realizate cât mai ușor cu putință. Utilizați un dispozitiv de îndoit țevi pentru îndoire.

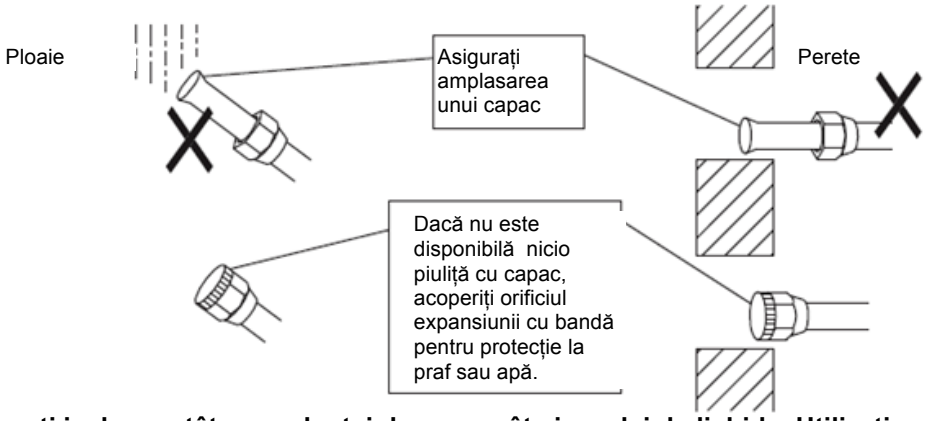

2) Asigurați izolarea atât a conductei de gaze, cât și a celei de lichide. Utilizați material de izolare termică separat pentru conducta de agent frigorific gazos și lichid. Consultați imaginea de mai jos.

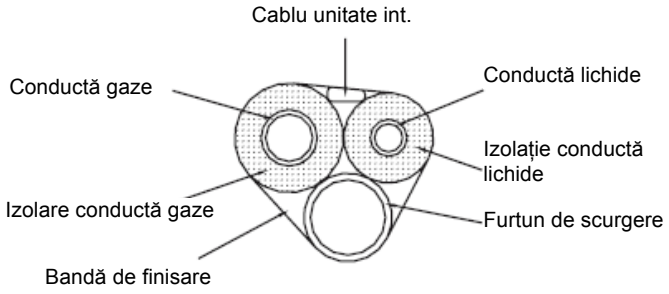

Procedura de izolare a țevilor

Conducte de gaze

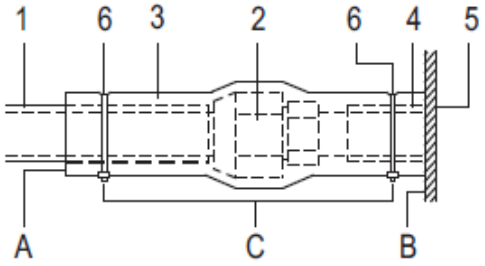

Conducte de lichide

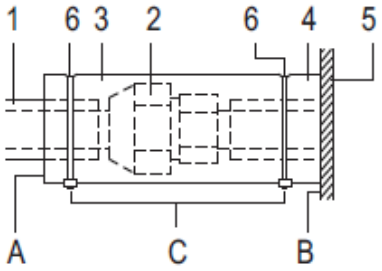

1 Material de izolare conducte (aprovizionat cu aparatul)
2 Conexiunea piuliței de expansiune
3 Izolarea pentru montare (aprovizionată cu aparatul)
4 Material de izolare conducte (unitatea principală)
5 Unitatea interioară
6 Clemă (aprovizionată cu aparatul)
A Rotiți orificiile în sus
B Atașați de bază
C Strângeți partea cu excepția materialului de izolare conducte

- Pentru izolații locale, asigurați-vă că izolați conducta până la capăt, până la conexiunile conductei din interiorul unității. Conductele expuse pot crea condens sau pot cauza arsuri la atingere.

- Asigurați-vă că nu rămâne ulei pe părțile din plastic ale panoului decorativ (echipament opțional).
  Uleiul poate cauza degradarea și avarierea părților de plastic.

4. LEGAREA CONDUCTEI DE SCURGERE

4.1 Instalați conductele de scurgere

- Mențineți conductele pe cât de scurte posibil și îndreptați-le în jos în unghi de cel puțin 1/100 astfel încât aerul să nu rămână blocat în interiorul conductei.
- Mențineți dimensiunea conductei egală cu sau mai mare decât cea a conductei de legătură (țeavă din PVC, diametru nominal de 20 mm la interior, diametru exterior de 25 mm).
- Apăsați furtunul de scurgere pe cât de adânc posibil peste racordul de scurgere, apoi strângeți bine clema de metal.

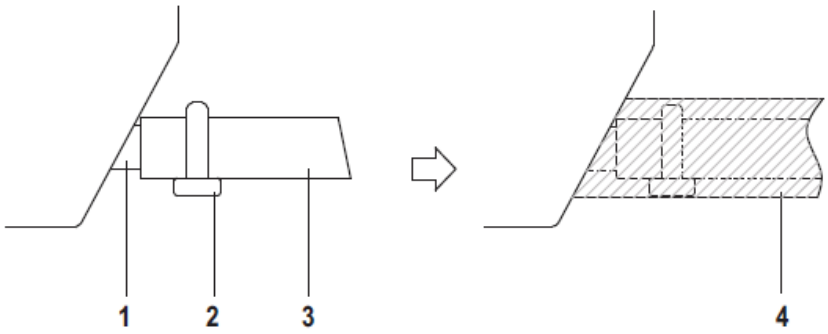

1 Racord de scurgere (atașat unității)
2 Clemă de metal
3 Furtun de scurgere
4 Izolare (aprovizionare la fața locului)

- Izolați furtunul de scurgere în interiorul clădirii.
- Dacă furtunul de scurgere nu poate fi înclinat suficient, montați furtunului o conductă de scurgere pentru ridicare (aprovizionare la fața locului)
- Asigurați-vă că lucrările de izolare termică sunt realizate în următoarele 2 locuri pentru a preveni posibile scurgeri de apă din cauza condensului.
  1 Conductă de scurgere interioară
  2 Racord de scurgere

5. LUCRĂRI DE CABLARE ELECTRICĂ

Instrucțiuni generale

- Toate cablurile și componentele aparatului trebuie instalate de către un electrician autorizat și trebuie să fie conforme cu reglementările relevante naționale și europene.
- Utilizați doar fire din cupru.

- Urmați „Diagrama de cablare” atașată aparatului pentru cablarea unității exterioare, unității interioare și a telecomenzii.
- Trebuie instalat un întrerupător de circuit ce poate să oprească alimentarea cu energie electrică a întregului sistem.
- Rețineți că funcționarea va reîncepe automat dacă alimentarea principală cu electricitate este oprită și apoi repornită.
- Asigurați-vă că aparatul de aer condiționat este legat la împământare.
- Nu conectați cablul de împământare la conducta de gaz, de apă, la paratrăsnete sau cabluri de telefon subterane.
  - Conducte de gaze: poate cauza explozie sau incendiu dacă apar scurgeri de gaze.
  - Conducte de apă: nu există efect de împământare dacă sunt utilizate conducte groase din vinil dur.
  - Cablurile de telefon subterane sau paratrăsnete: pot cauza potențial electric anormal de mare în pământ în timpul furtunilor electrice.

Dimensiunea minimă nominală transversală a conductorilor:

Curentul nominal al aparatului (A)	Dimensiunea nominală transversală (mm2)
≤ 6	0.75
>6 și ≤ 10	1.0
>10 și ≤ 16	1.5
>16 și ≤ 25	2.5
>25 și ≤ 32	4.0
>32 și ≤ 45	6.0
>45 și ≤ 60	10.0

NOTĂ:
Dimensiunea cablurilor și curentul siguranțelor sau comutatorului sunt stabilite de curentul maxim indicat pe plăcuța de identificare poziționată pe panoul lateral al unității. Vă rugăm consultați plăcuța de identificare înainte de alegerea cablului, siguranței ș a comutatorului.

Specificații electrice

MODEL (Btu/h)		18K	24K	30K-36K	42K-48K	55K	36K	42K-55K
PUTERE (interioară)	FAZĂ	1 fază	1 fază	1 fază	1 fază	1 fază	1 fază	1 fază
	VOLTAJ	220-240V	220-240V	220-240V	220-240V	220-240V	220-240V	220-240V
COMUTATOR/ SIGURANȚĂ (A)		15/10	15/10	15/10	15/10	15/10	15/10	15/10
PUTERE (exterioară)	FAZĂ	1 fază	1 fază	1 fază	1 fază	1 fază	3 faze	3 faze
	VOLTAJ	220-240V	220-240V	220-240V	220-240V	220-240V	380-415V	380-415V
COMUTATOR/ SIGURANȚĂ (A)		30/20	30/20	40/30	40/35	50/40	30/20	30/20

Modul de conectare a cablurilor

- Îndepărtați capacul panoului de control al unității interioare.
- Îndepărtați capacul unității exterioare.
- Urmați eticheta „Diagrama de cablare” atașată pe capacul panoului de control al unității interioare pentru a cabla unitatea exterioară, unitatea interioară și telecomanda. Fixați bine cablurile cu o clemă aprovizionată împreună cu aparatul.
- Atașați capacul unității exterioare.

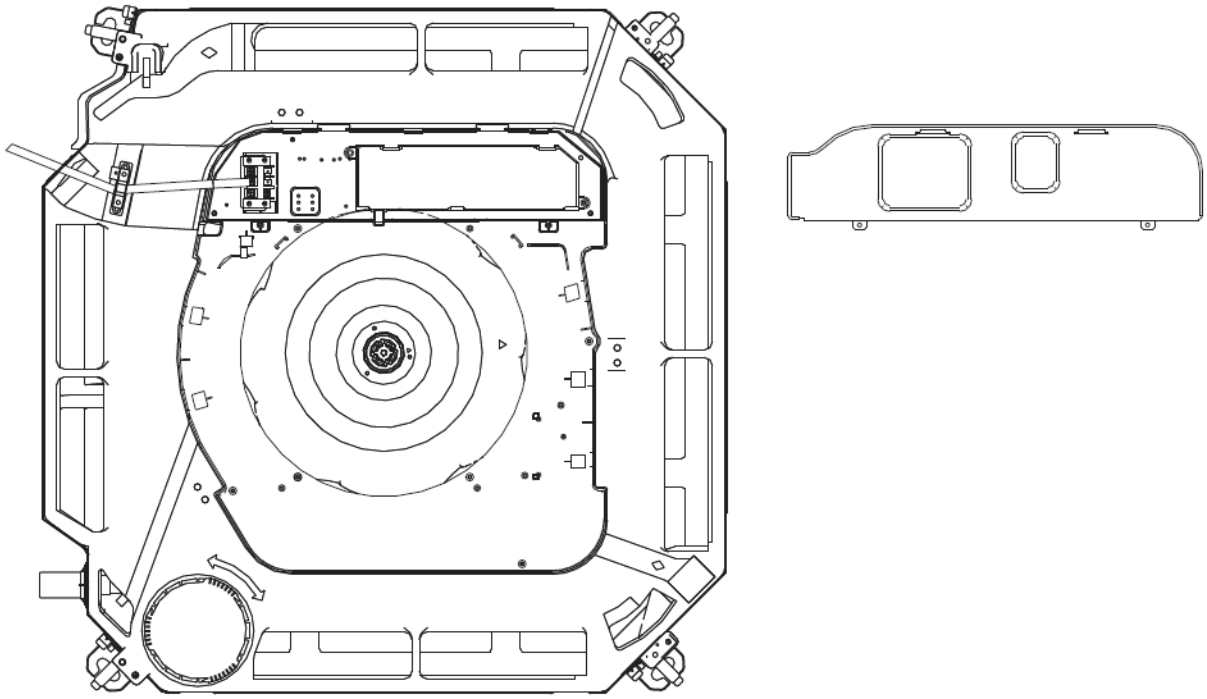

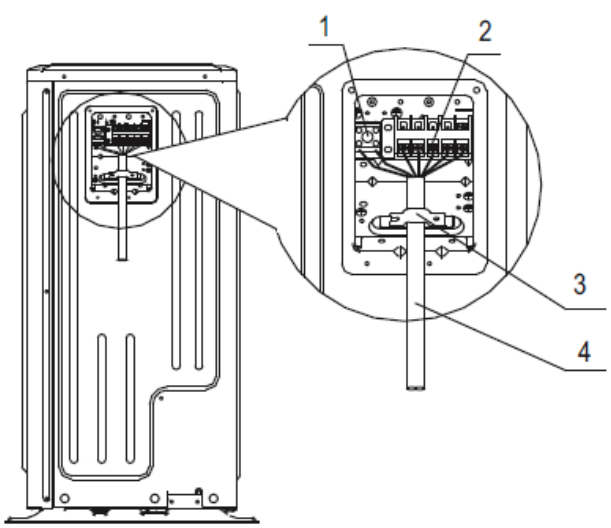

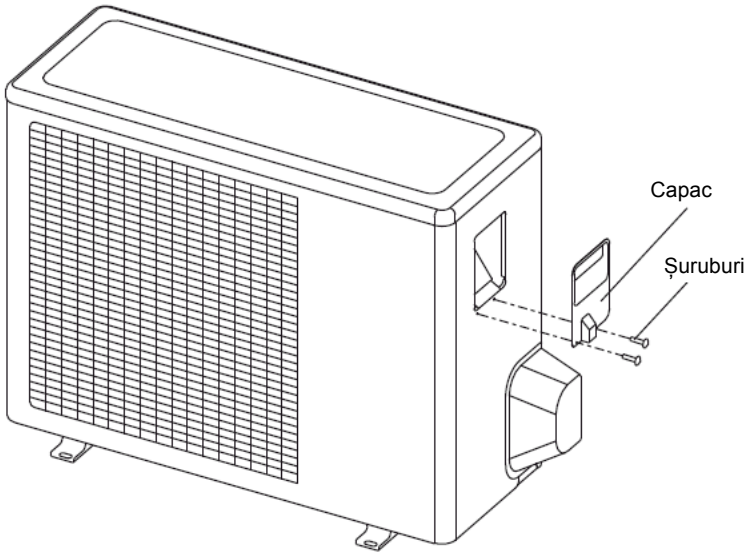

1 Racord cablu de semnal
2 Bloc terminal alimentare electrică
3 Clemă pentru cablare
4 Cablarea dintre unități

Precauții

1. Rețineți notele menționate mai jos atunci când se realizează cablarea la panoul terminal de alimentare electrică.

- Nu conectați cablurile de diferite calibre la același terminal electric. (O conexiune nesigură poate duce la supraîncălzire.)
- La conectarea cablurile de același calibru, legați-le conform cu imaginea de mai jos:

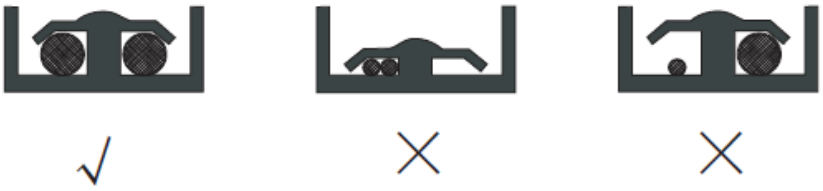

Utilizați cablul electric specificat. Conectați ferm cablul la terminal. Blocați cablul fără a aplica o forță excesivă asupra terminalului. (Cuplul de torsiune: 1.31N.m ± 10%).

- La atașarea capacului panoului de control, aveți grijă să nu apucați firele.
- După realizarea tuturor conexiunilor de cabluri, umpleți golurile din orificiile de cablare din panou cu mastic sau material izolator (alimentat cu aparatul) pentru a preveni astfel pătrunderea animalelor mici sau mizeriei din afara unității ce pot cauza scurtcircuite în panoul de control.

2. Nu conectați cabluri de calibre diferite la același terminal de împământare. O conexiune nesigură poate deteriora protecția.

3. Utilizați doar cablurile specificate și conectați strâns firele la terminale. Aveți grijă ca firele să nu tensioneze extern terminalele. Păstrați cablurile în ordine astfel încât să nu blocheze alte echipamente sau să nu deschidă capacul de la panou. Asigurați-vă că capacul se închide bine. Conexiunile incomplete pot duce la supraîncălzire și în cel mai rău caz, la electrocutare sau incendiu.

6. CONDUCTA DE AGENT FRIGORIFIC (aparatele cu funcții duble)

6.1 Lungimea și înălțimea de cădere permise pentru conducta de agent frigorific

Notă: Lungimea redusă a țevii ramificate este de 0.5 m din lungimea echivalentă a conductei.

		Valoare maximă		Conducte
Lungime conductă	Lungime totală conductă (reală)	18K + 18K	30m	L+L1+L2
		24K + 24K/ 30K + 30K	50m	
	(distanța maximă de la ramificația conductei)	15m		L1; L2
	(distanța maximă de la ramificația conductei)	10m		L1-L2

Înălțime cădere	Înălțime de cădere unitate interioară – unitate exterioară	20m	H1
	Înălțime de cădere unitate interioară – unitate exterioară	0.5m	H2

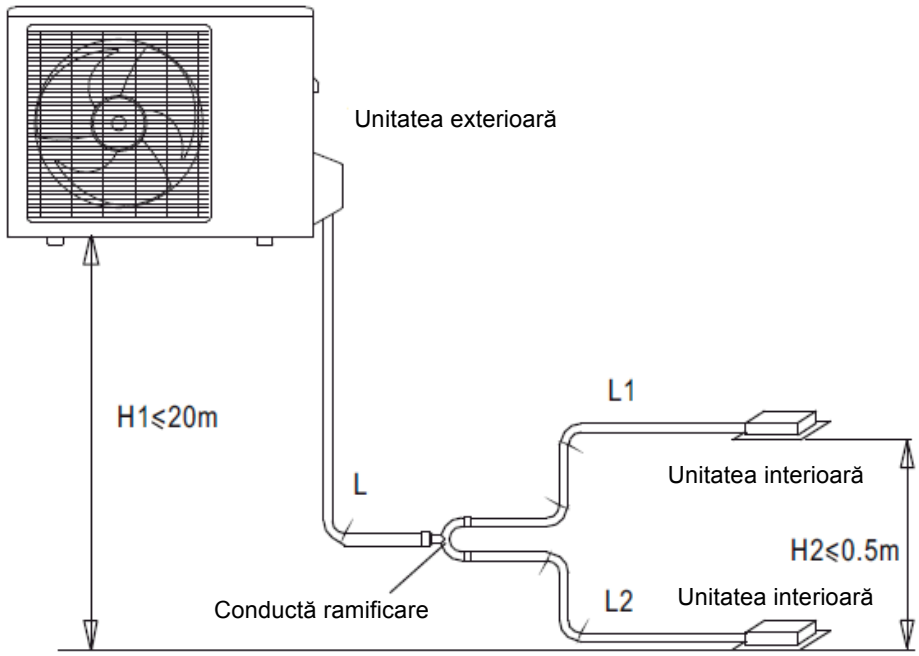

Notă: Toate ramificațiile conductei trebuie produse de către Midea, deoarece, în caz contrar, pot apărea defecțiuni. Unitățile interioare trebuie instalate echivalent pe ambele părți ale conductei de ramificare de tip U.
Ramificația conductei trebuie instalată orizontal, unghiul său de eroare nu trebuie să fie mai mare de 10°. În caz contrar, pot apărea defecțiuni.

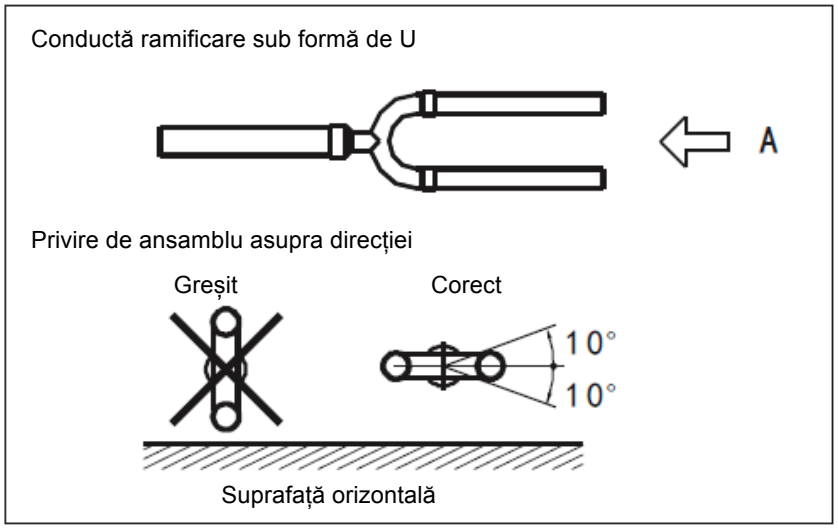

6.2 Cantitatea de agent frigorific de adăugat

Calculați agentul frigorific suplimentar conform cu diametrul și lungimea conductei de lichide a conexiunii unității interioare/ exterioare. Agentul frigorific este R410A.

Dimensiune conductă de lichide	Agent frigorific de suplimentat pe metru
Ø 6.35	0,015 kg
Ø 9.5	0,030 kg

7. TESTAREA FUNCȚIONĂRII

Aveți grijă ca toate capacele panoului de control să fie închise pentru unitățile interioare și exterioare.
Consultați „Pentru următoarele elemente, aveți grijă în timpul construcției și verificați-le după finalizarea instalării” de la pagina 2.
După terminarea instalării conductei de agent frigorific, conductei de scurgere și cablării electrice, efectuați testarea funcționării adecvat pentru a proteja aparatul.

Testarea funcționării după instalarea panoului decorativ

1. Deschideți supapa de oprire de pe partea cu gaz
2. Deschideți supapa de oprire de pe partea cu lichid
3. Alimentați cu electricitate dispozitivul de încălzire din carterul motorului timp de 6 ore.
4. Setați operațiunea de răcire cu ajutorul telecomenzii și porniți funcționarea prin apăsarea butonului PORNIRE / OPRIRE (ON/OFF).
5. Verificați următoarele puncte. Dacă există defecțiuni, vă rugăm să le rezolvați conform capitolului „Depanare” din „Manualul de Utilizare”.

- Unitatea interioară
  - Dacă comutatorul de pe telecomandă funcționează bine
  - Dacă butoanele de pe telecomandă funcționează bine
  - Dacă flapsul fluxului de aer se mișcă normal.
  - Dacă temperatura camerei este potrivită bine.
  - Dacă indicatorul se aprinde normal
  - Dacă butoanele temporare funcționează bine.
  - Dacă există vibrații sau zgomote anormale în timpul funcționării.
  - Dacă scurgerea curge lin.
- Unitatea exterioară
  - Dacă există vibrații sau zgomote anormale în timpul funcționării.
  - Dacă aerul evacuat de, zgomotul făcut de sau condensul produs de aparatul de aer condiționat au vreo influența asupra vecinilor dvs.
  - Dacă agentul frigorific curge.

6. opriți alimentarea cu energie electrică după funcționare.

O funcție de protecție previne activarea aparatului de aer condiționat la aproximativ 3 minute după activare, în momentul repornirii acestuia imediat după oprire.

Proiectarea și specificațiile produsului sunt supuse schimbării fără notificare în prealabil pentru îmbunătățirea produsului. Consultați agenții de vânzări sau producătorul pentru detalii.

AIR CONDITIONING SYSTEMS
CASSETTE TYPE

Scan here to download the latest version of this manual.
Σαρώστε εδώ για να κατεβάσετε την τελευταία έκδοση του εγχειριδίου.