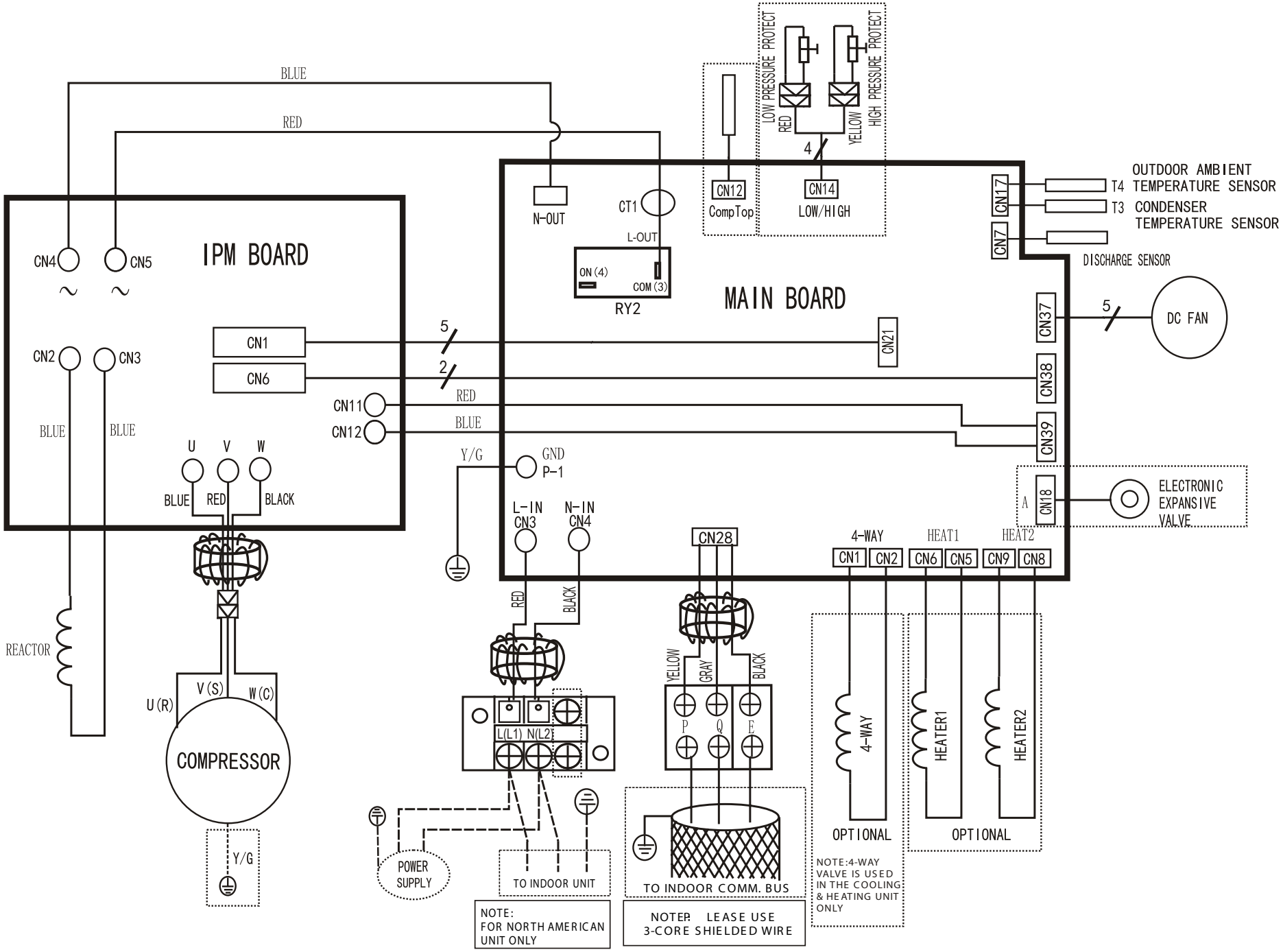
BLUE
RED
IPM BOARD
CN4
CN5
CN2
CN3
CN1
CN6
CN11
CN12
BLUE
BLUE
U
V
W
BLUE
RED
BLACK
REACTOR
U(R)
V(S)
W(C)
COMPRESSOR
Y/G
N-OUT
CT1
L-OUT
ON(4)
COM(3)
RY2
CN12
CompTop
LOW PRESSURE PROTECT
HIGH PRESSURE PROTECT
RED
YELLOW
4
CN14
LOW/HIGH
MAIN BOARD
CN17
CN7
T4 OUTDOOR AMBIENT TEMPERATURE SENSOR
T3 CONDENSER TEMPERATURE SENSOR
DISCHARGE SENSOR
CN37
5
DC FAN
CN21
CN38
CN39
5
2
RED
BLUE
Y/G
GND
P-1
A
CN18
ELECTRONIC EXPANSIVE VALVE
L-IN
CN3
N-IN
CN4
CN28
4-WAY
HEAT1
HEAT2
CN1
CN2
CN6
CN5
CN9
CN8
RED
BLACK
YELLOW
GRAY
BLACK
L(L1) N(L2)
P
Q
E
4-WAY
HEATER1
HEATER2
OPTIONAL
OPTIONAL
NOTE:4-WAY VALVE IS USED IN THE COOLING & HEATING UNIT ONLY
POWER SUPPLY
TO INDOOR UNIT
TO INDOOR COMM. BUS
NOTE: FOR NORTH AMERICAN UNIT ONLY
NOTE: LEASE USE 3-CORE SHIELDED WIRE